YACHT CLUB AT SUMMER'S END

CORAL BAY, ST. JOHN, USVI

The Summer's End Group, LLC

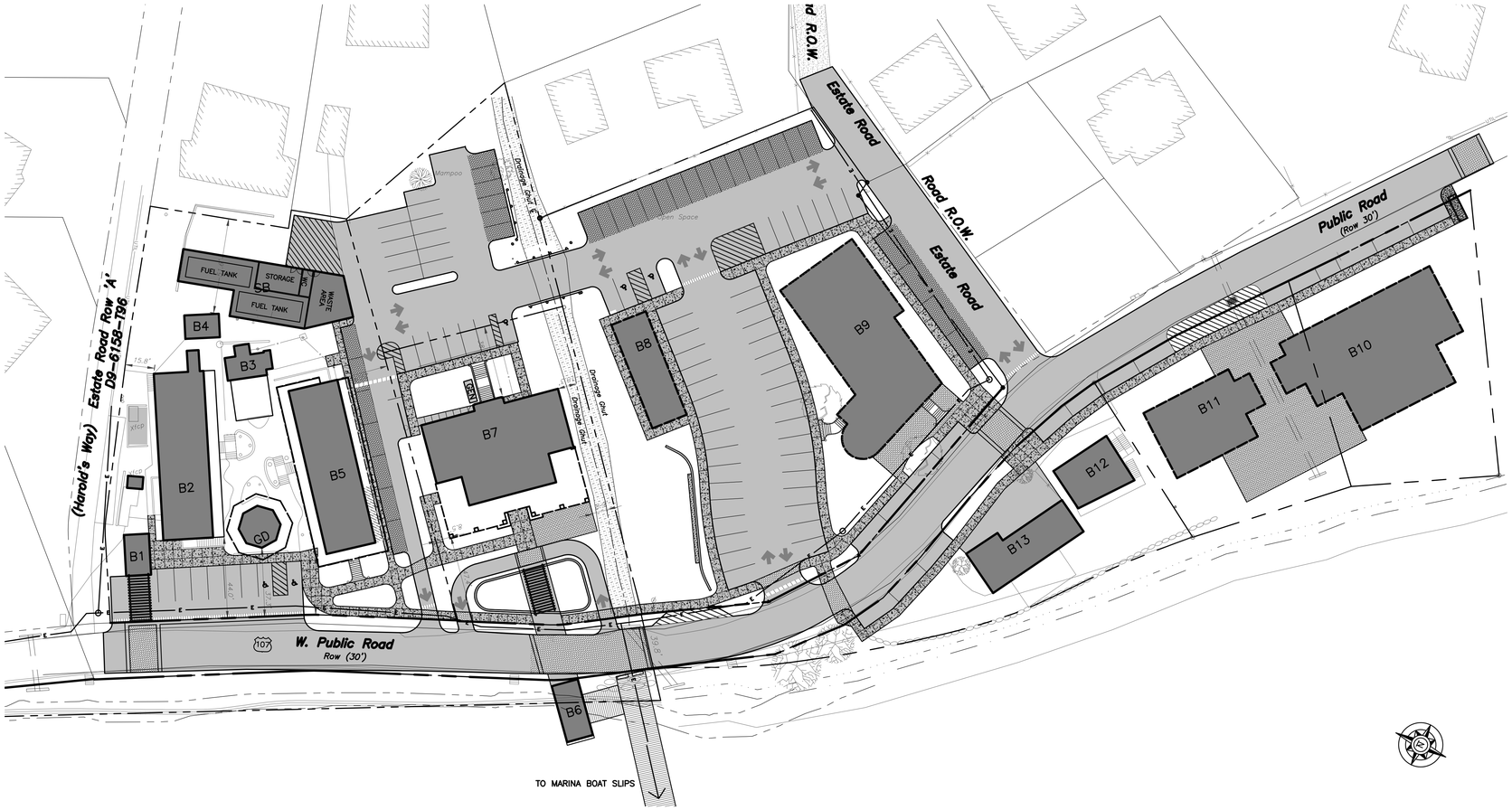

GRAPHIC SCALE

0 15 30 60 120

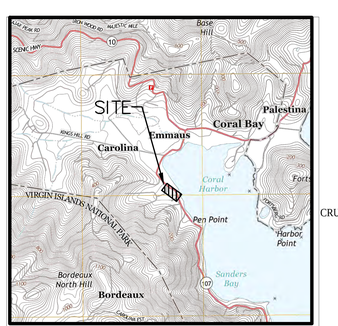

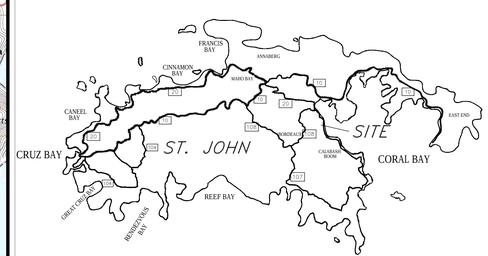

ISLAND MAP

NOT TO SCALE

SHEET INDEX

SHEET	DRAWING NUMBER AND TITLE
1 of 15	C001 COVER SHEET
2 of 15	C100 EXISTING FEATURES AND DEMOLITION PLAN
3 of 15	C200 SITE PLAN – PROJECT AREA
4 of 15	C201 SITE PLAN – REMAINDER PARCEL NO. 13 (WESTERN PORTION)
5 of 15	C202 SITE PLAN – REMAINDER PARCEL NO. 13 (EASTERN PORTION)
6 of 15	C203 SITE PLAN – PARCEL NO. 13–A PARCEL NO. 13–B
7 of 15	C204 SITE PLAN – PARCEL NO. 41–REMAINDER
8 of 15	C205 SITE PLAN – PARCEL NO. 10–17 PARCEL NO. 10–18
9 of 15	C206 SITE PLAN – PARCEL NO. 10–19
10 of 15	C210 SITE PLAN DETAILS
11 of 15	C400 STORM WATER MANAGEMENT PLAN PROJECT AREA
12 of 15	C500 EROSION & SEDIMENT CONTROL PLAN OVERALL AND STAGE 1
13 of 15	C501 EROSION & SEDIMENT CONTROL PLAN STAGE 2 AND 3
14 of 15	C502 EROSION & SEDIMENT CONTROL PLAN STAGE 4
15 of 15	C510 EROSION & SEDIMENT CONTROL PLAN DETAILS

YACHT CLUB AT SUMMER'S END
CORAL BAY, ST. JOHN, USVI
Prepared for:
The Summer's End Group, LLC
5000 Estate Enighed, Suite 63
St. John, USVI 00830
340.777.9075

SEAL:

PROFESSIONAL ENGINEER
JOSEPH A. MINA
1049E
U.S. VIRGIN ISLANDS

Documents prepared by Cairone & Kaupp, Incorporated are instruments of service for use solely with respect to this Project and unless otherwise provided, Cairone & Kaupp, Incorporated shall be deemed the author of these documents and shall retain all common law, statutory and other reserved rights, including the copyright. They are not intended or represented to be suitable for reuse by Owner or others on extension of the Project or on any other project. Any reuse without written verification or adoption by Cairone & Kaupp, Incorporated will be at Owner's sole risk and without liability or legal exposure to Cairone & Kaupp, Incorporated; and Owner shall indemnify and hold harmless Cairone & Kaupp, Incorporated from all claims, damages, losses and expenses including attorney's fees arising out of or resulting therefrom.

Date	No.	Revision	By
06–23–14	1	FINAL CZM SUBMISSION	JAM

ENVIRONMENTAL:

Bioimpact, Inc.
P.O. Box 132 Kingshill
St. Croix, U.S. Virgin Islands 00851
340 690–8445 Fax 340 718–3800
bioimpact.islands.vi@gmail.com

SURVEY:

MARVIN BERNING & ASSOCIATES
LAND SURVEYORS SUBDIVISION PLANNING PROPERTY SURVEYS
6501 Red Hook Plaza, Suite 201,
Saint Thomas,VI 00802–1306
340–775–6557 email: bgrinsurvey@gmail.com

TRAFFIC:

HCA Hoover & Keller Associates
A Professional Corporation
TRANSPORTATION AND TRAFFIC ENGINEERING
4950 York Road – Suite 2C
Holicong, Pennsylvania 18928–031
(267) 544–0508
Medford, New Jersey 08055
(609) 654–1879

PRIME:

ATM
APPLIED TECHNOLOGY & MANAGEMENT
Applied Technology & Management, Inc.
411 Pablo Avenue
Jacksonville Beach, FL 32250
O: 904-249-8008
www.appliedtm.com
Coastal, Environmental, Marine, and Water Resource Engineering

CIVIL:

Cairone & Kaupp, Inc.
Landscape Architecture
Civil Engineering
1118 East Columbia Avenue
Philadelphia, PA 19125 4206
Phone: 215 291 2800
Fax: 215 291 2804
www.caironekaupp.com

Drawing Title:

COVER SHEET

Project No.:	1220
Drawn By:	RMB
Approved By:	JAM
Scale:	1" = 30'
Date:	28MAR14
Drawing No.:	C001
Sheet	1 of 15

P:\2012\1220-usvi marina\Cad\Current\1220C-C001.dwg | Jun 23, 2014 - 1:36pm | JMina | Cairone & Kaupp, Inc.

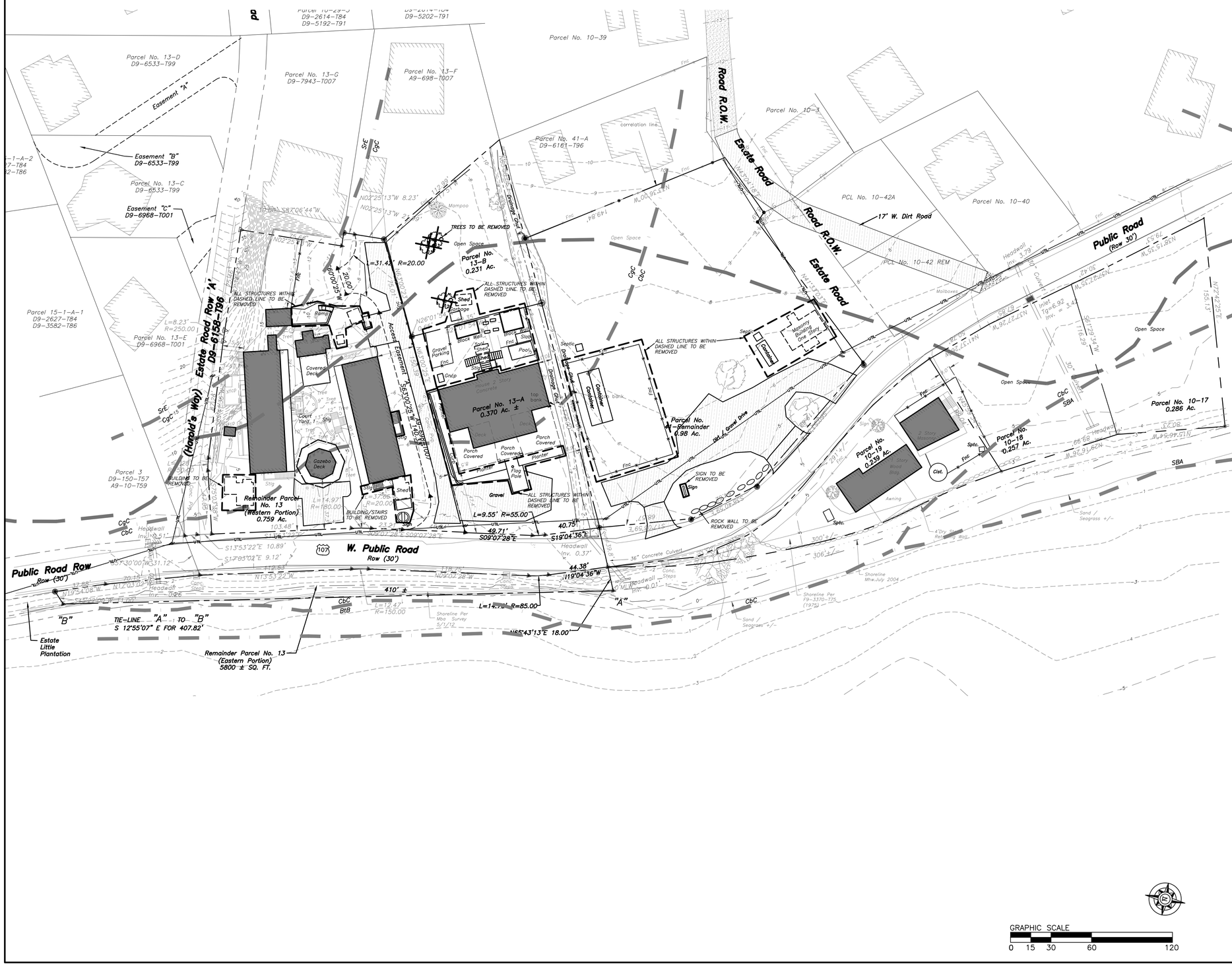

GENERAL NOTES

1. CONTRACTOR SHALL INSPECT AND VERIFY ALL FIELD DIMENSIONS AND SITE CONDITIONS SHOWN HEREIN BEFORE PROCEEDING WITH THE WORK. DISCREPANCIES BETWEEN FIELD CONDITIONS AND THESE PLANS SHALL BE BROUGHT TO THE ENGINEER'S ATTENTION PRIOR TO ANY COMMENCEMENT OF THE WORK. ONCE CONSTRUCTION HAS BEGUN CONTRACTOR SHALL NOT USE FIELD INFORMATION DISCREPANCIES AS THE BASIS FOR CHANGE ORDER CLAIMS.
2. THE LOCATION OF EXISTING UNDERGROUND UTILITIES ARE SHOWN IN AN APPROXIMATE WAY ONLY AND HAVE NOT BEEN INDEPENDENTLY VERIFIED. THE CONTRACTOR SHALL DETERMINE THE EXACT LOCATION OF ALL EXISTING UTILITIES BEFORE COMMENCING WORK, AND AGREES TO BE FULLY RESPONSIBLE FOR ANY AND ALL DAMAGES WHICH MIGHT BE OCCASIONED BY THE CONTRACTORS FAILURE TO EXACTLY LOCATE AND PRESERVE ANY AND ALL UNDERGROUND UTILITIES.

NOTES

1. PLAN REFERENCE: EXISTING FEATURES, TOPOGRAPHY AND BOUNDARY INFORMATION SHOWN HEREON ARE TAKEN FROM INFIRMATION PROVIDED BY THE CLIENT. SURVEY INFORMATION PROVIDED BY MARVIN BERNING & ASSOCIATES, 6051 RED HOOK PLAZA, SUITE 201, ST. THOMAS, VI 00802, PHONE: 340-775-6557. CARONE AND KAUPP, INC. DOES NOT GUARANTEE THE SURVEY INFORMATION. PRIOR TO CONSTRUCTION, ALL INFORMATION SHOULD BE FIELD VERIFIED TO ASSESS THE ACTUAL CONDITIONS ON THE GROUND AT THE TIME OF CONSTRUCTION.
2. FLOODPLAIN INFORMATION SHOWN HEREON TAKEN FROM FEMA FIRM MAP NUMBER 7800000035G DATED APRIL 16, 2007 AND ACCOMPANYING DIGITAL DATA FROM FEMA GIS INFORMATION. FLOODPLAIN ON THE SUBJECT PROPERTY IS AT ELEVATION 10 FEET.
3. THE DETENTION BASINS (AS SHOWN ON THE PLAN) ARE PERMANENT FACILITIES AND SHALL NOT BE MODIFIED OR REMOVED UNLESS PRIOR APPROVAL IS GRANTED BY THE DEPARTMENT OF PLANNING AND NATURAL RESOURCES(DPNR). THE OWNER/PERMITEE SHALL BE RESPONSIBLE FOR THE PERPETUAL MAINTENANCE OF ALL GRADES AND ELEVATIONS OF SUCH FACILITIES, AND SHALL DO NOTHING TO ALTER OR DAMAGE SAME OR OTHER BASIN STRUCTURES AND DEVICES. THESE RESPONSIBILITIES SHALL INCLUDE ROUTINE LAWN CARE, REMOVAL OF ORDINARY INNOCUOUS DEBRIS THAT MAY OBSTRUCT THE PROPER OPERATION OF THE BASINS, AND MAINTENANCE OF THE STRUCTURAL INTEGRITY AND REPAIR OF ALL OUTLET PIPES, WALL STRUCTURES AND OTHER PERMANENT STRUCTURAL DEVICES. THE DPNR SHALL HAVE PERPETUAL EASEMENTS ON AND OVER THE AREAS OF THE DETENTION BASINS FOR THE PURPOSE OF EMERGENCY MAINTENANCE AND REPAIR OF SAID PERMANENT FACILITIES. THE AFORESAID RESPONSIBILITIES OF THE OWNER/PERMITEE SHALL BE SUBJECT TO ENFORCEMENT BY DPNR. IN THE EVENT THAT THE OWNER/PERMITEE FAILS TO HONOR THE RESPONSIBILITY SET FORTH HEREIN, IN ANY MANNER, DPNR SHALL HAVE THE RIGHT OF ENTRY UPON AND WITHIN THE AREA OF THE BASINS TO UNDERTAKE SUCH CORRECTIVE OR MAINTENANCE EFFORTS. THE COST OF SUCH, AS WELL AS ADMINISTRATIVE, ENGINEERING, AND LEGAL COSTS FOR ENFORCEMENT, MAY BE IMPOSED UPON THE PERMITEE, AS DETERMINED AND ASSESSED BY DPNR.

LEGEND

- Right of Way Line
- Property Line
- Storm Sewer Pipe
- Fence Line
- Contour
- Building Adjacent
- Building
- Roof Overhang
- FEMA 100Yr Floodplain
- CgC / SoE / CbC — Soil Boundry with Soil Types
- +10.00 — Spot Elevation
- Inlet — Storm Sewer Inlet
- Headwall — Storm Sewer Headwall
- Manhole
- Dry Stone Retaining Wall
- Signs
- Trees
- Cist. — Existing Cistern
- Curb — Existing Curb
- Conc. Pvg. — Existing Concrete Paving
- Fnc — Existing Fence
- Gncp — Existing Generator on Concrete Pad
- Open Space — Existing Open Space Area
- Ramp — Existing Ramp
- Sptc. — Existing Septic
- Strs — Existing Stairs
- Stlg — Existing Stairs and Landing
- Xfcp — Existing Transformer on Concrete Pad
- BUILDING
- PAVEMENT TO BE REMOVED
- FUTURE BUILDING
- NEW PEDESTRIAN UNIT PAVERS
- NEW LANDSCAPE AREA
- NEW CONCRETE PAVING
- NEW CONCRETE SIDEWALK
- NEW PERMEABLE PAVERS
- NEW PERMANENT TURF REINFORCEMENT MATTING
- NEW ROCK STABILIZATION BLANKET
- 0 — NEW CONTOUR
- +0.00 — NEW SPOT GRADE
- 0 — PARKING SPACES
- MH — NEW MANHOLE
- OTS — NEW OUTLET STRUCTURE
- SD — NEW SEDIMENT TRAP
- NEW STORM LINE
- NEW SANITARY LINE
- NEW SANITARY FORCE MAIN
- NEW WATER LINE
- RW — NEW RECYCLED WATER LINE
- NEW UNDERGROUND ELECTRIC LINE
- NEW UNDERGROUND STORM WATER MANAGEMENT AREA
- NEW VERTICAL STONE INTERCEPTOR DRAIN
- NEW TRENCH DRAIN
- NEW END WALL

YACHT CLUB AT SUMMER'S END
CORAL BAY, ST. JOHN, USVI

Prepared for:
The Summer's End Group, LLC
5000 Estate Enighed, Suite 63
St. John, USVI 00830
340.777.9075

SEAL:

PROFESSIONAL ENGINEER — JOSEPH A. MINA 1049E — VIRGIN ISLANDS

Documents prepared by Cairone & Kaupp, Incorporated are instruments of service for use solely with respect to this Project and unless otherwise provided, Cairone & Kaupp, Incorporated shall be deemed the author of these documents and shall retain all common law, statutory and other reserved rights, including the copyright. They are not intended or represented to be suitable for reuse by Owner or others on extension of the Project or on any other project. Any reuse without written verification or adoption by Cairone & Kaupp, Incorporated will be at Owner's sole risk and without liability or legal exposure to Cairone & Kaupp, Incorporated; and Owner shall indemnify and hold harmless Cairone & Kaupp, Incorporated from all claims, damages, losses and expenses including attorney's fees arising out of or resulting therefrom.

Date	No.	Revision	By
06-23-14	1	FINAL CZM SUBMISSION	JAM

ENVIRONMENTAL:
Bioimpact, Inc.
P.O. Box 132 Kingshill
St. Croix, U.S. Virgin Islands 00851
340 690-8445 Fax 340 718-3800
bioimpact.islands.vi@gmail.com

SURVEY:
MARVIN BERNING & ASSOCIATES
LAND SURVEYORS SUBDIVISION PLANNING PROPERTY SURVEYS
6501 Red Hook Plaza, Suite 201, Saint Thomas,VI 00802-1306
340-775-6557 email: bgvisurvey@gmail.com

TRAFFIC:
HCA Hanover & Center Associates — A Partnership of Corporations
TRANSPORTATION AND TRAFFIC ENGINEERING
Rte. Marlton Pike - Suite 7 Marlton, New Jersey 08053 (856) 854-8199
4950 York Road – Suite 2C Holicong, Pennsylvania 18928-031 (267) 544-0508

PRIME:
ATM — APPLIED TECHNOLOGY & MANAGEMENT
Applied Technology & Management, Inc.
411 Public Avenue
Jacksonville Beach, FL 32250
O: 904-246-8050
www.appliedtm.com
Coastal, Environmental, Marine, and Water Resource Engineering

CIVIL:
Cairone & Kaupp, Inc.
Landscape Architecture
Civil Engineering
1118 East Columbia Avenue
Philadelphia, PA 19125 4206
Phone: 215 291 2800
Fax: 215 291 2804
www.caironekaupp.com

Drawing Title:
EXISTING FEATURES AND DEMOLITION PLAN

Project No.: 1220	Drawing No.: C100
Drawn By: RMB	
Approved By: JAM	
Scale: 1" = 30'	
Date: 28MAR14	Sheet 2 of 15

P:\2012\1220-usvi marina\Cad\Current\1220C-C100.dwg | Jun 23, 2014 - 1:36pm | JMina | Cairone & Kaupp, Inc.

REMAINDER PARCEL NO. 13 (WESTERN PORTION)
SEE DWG. NO. C201 FOR SITE PLAN

- REMOVE SELECTED STRUCTURES AND BUILDINGS
- RECONFIGURE PEDESTRIAN ACCESS TO BUILDINGS ADJACENT TO ROADWAY
- IMPROVE INTERIOR FLOOR SPACE FOR BUILDING ADJACENT TO PARCEL NO. 13A
- EXPAND OUTDOOR SEATING AREA AROUND BUILDING ADJACENT TO PARCEL NO. 13A
- NEW PARKING AREAS FOR 13 SPACES AND 2 ADA VAN ACCESSIBLE SPACES
- NEW BUILDING FOR GOLF CART STORAGE
- NEW ABOVE GRADE FUEL TANKS AND SOLID WASTE DISPOSAL AREA.
- NEW ENCLOSURE FOR FUEL TANKS AND SOLID WASTE AREA WITH STORAGE AND REST ROOM FACILITY
- NEW LOADING AND TAXI QUEUING AREA
- NEW RAISED PEDESTRIAN CROSSWALK CONNECTING UPLAND WITH CORAL BAY
- NEW STORM WATER MANAGEMENT MEASUREMENTS
- NEW DRIVEWAY OPENING
- NEW SANITARY SEWAGE HOLDING TANK FOR MARINE PUMP-OUT FACILITY.
- UPGRADE SELECTED LANDSCAPED AREAS
- NEW SANITARY SEWER TREATMENT FACILITY WITH WATER RECYCLING/GREYWATER SYSTEM
- NEW WATER CISTERN – 4,000 GALLONS REUSE
- EXISTING CISTERNS TO REMAIN – 52,800 GALLONS POTABLE

PARCEL NO. 13-B
SEE DWG. NO. C203 FOR SITE PLAN

- REMOVE SELECTED STRUCTURES AND TREES
- NEW PARKING AREA FOR 17 SPACES
- NEW CONCRETE PAVED WALKWAY SYSTEM
- NEW WASTEWATER TREATMENT PLANT
- NEW STORM WATER MANAGEMENT MEASURES
- UPGRADE SELECTED LANDSCAPED AREAS
- NEW WATER CISTERN – 5,000 GALLONS REUSE

REMAINDER PARCEL NO. 41-REMAINDER
SEE DWG. NO. C204 FOR SITE PLAN

- REMOVE SELECTED STRUCTURES AND TREES
- NEW PARKING AREAS FOR 66 SPACES AND 2 ADA VAN ACCESSIBLE SPACES
- NEW LOADING AND TAXI QUEUING AREA
- NEW CONCRETE PAVED WALKWAY SYSTEM
- NEW DOMESTIC WATER WELL
- NEW RAISED PEDESTRIAN CROSSWALK CONNECTING UPLAND WITH PARCEL NO. 10-19
- NEW STORM WATER MANAGEMENT MEASURES
- NEW DRIVEWAY OPENINGS
- UPGRADE SELECTED LANDSCAPED AREAS
- PROVIDE OPEN SPACE AREAS FOR FUTURE BUILDINGS
- NEW SANITARY SEWER TREATMENT FACILITY WITH WATER RECYCLING/GREYWATER SYSTEM
- NEW WATER CISTERNS – 100,000 GALLONS POTABLE AND 7,000 GALLONS REUSE UNDER BUILDINGS

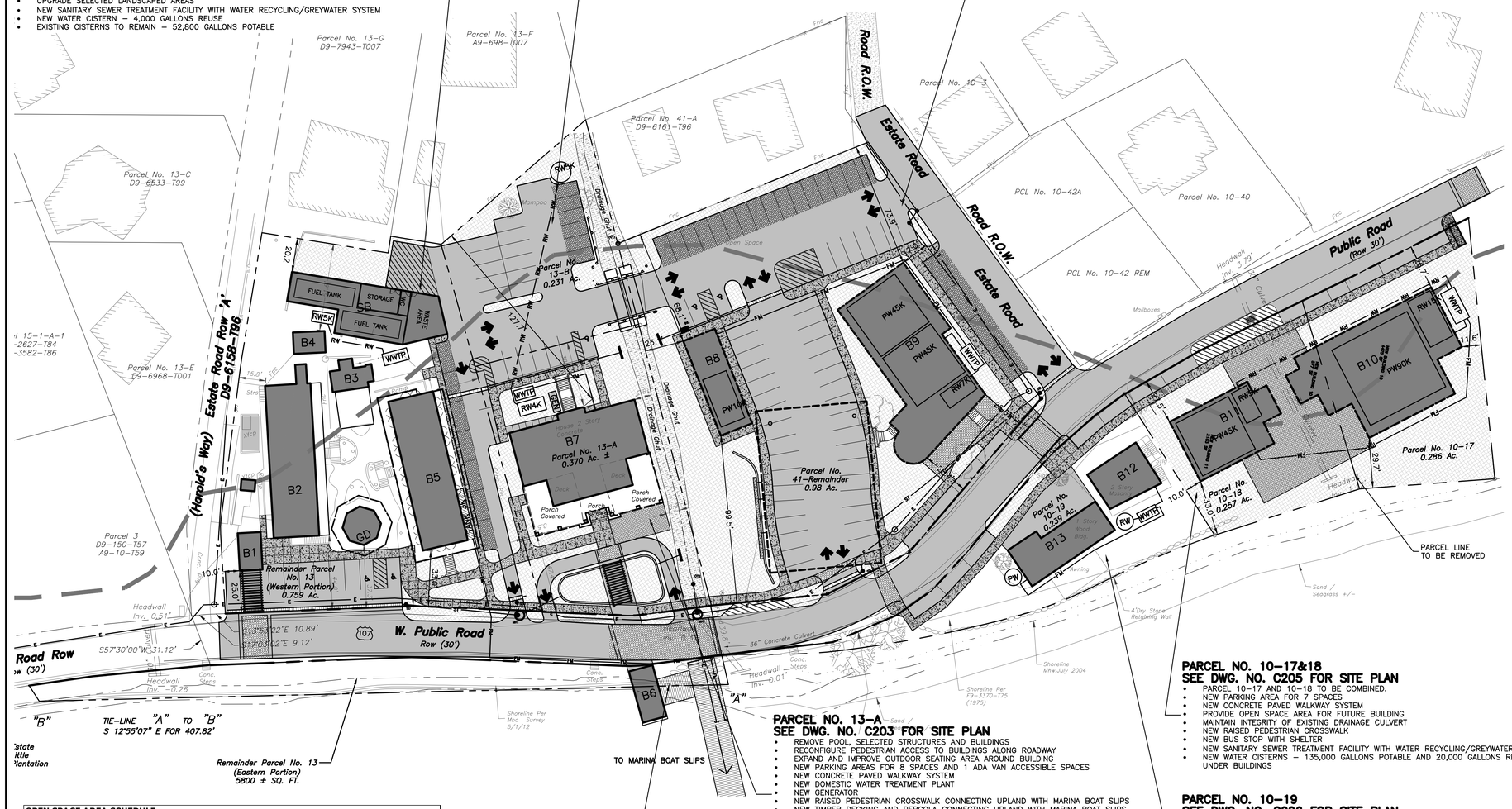

PARCEL NO. 10-17&18
SEE DWG. NO. C205 FOR SITE PLAN

- PARCEL 10-17 AND 10-18 TO BE COMBINED.
- NEW PARKING AREA FOR 7 SPACES
- NEW CONCRETE PAVED WALKWAY SYSTEM
- PROVIDE OPEN SPACE AREA FOR FUTURE BUILDING
- MAINTAIN INTEGRITY OF EXISTING DRAINAGE CULVERT
- NEW RAISED PEDESTRIAN CROSSWALK
- NEW BUS STOP WITH SHELTER
- NEW SANITARY SEWER TREATMENT FACILITY WITH WATER RECYCLING/GREYWATER SYSTEM
- NEW WATER CISTERNS – 135,000 GALLONS POTABLE AND 20,000 GALLONS REUSE UNDER BUILDINGS

PARCEL NO. 13-A
SEE DWG. NO. C203 FOR SITE PLAN

- REMOVE POOL, SELECTED STRUCTURES AND BUILDINGS
- RECONFIGURE PEDESTRIAN ACCESS TO BUILDINGS ALONG ROADWAY
- EXPAND AND IMPROVE OUTDOOR SEATING AREA AROUND BUILDING
- NEW PARKING AREAS FOR 8 SPACES AND 1 ADA VAN ACCESSIBLE SPACES
- NEW CONCRETE PAVED WALKWAY SYSTEM
- NEW DOMESTIC WATER TREATMENT PLANT
- NEW GENERATOR
- NEW RAISED PEDESTRIAN CROSSWALK CONNECTING UPLAND WITH MARINA BOAT SLIPS
- NEW TIMBER DECKING AND PERGOLA CONNECTING UPLAND WITH MARINA BOAT SLIPS
- NEW STORM WATER MANAGEMENT MEASURES
- NEW DRIVEWAY OPENING
- NEW PLAZA AREA
- UPGRADE SELECTED LANDSCAPED AREAS
- NEW SANITARY SEWER TREATMENT FACILITY WITH WATER RECYCLING/GREYWATER SYSTEM
- NEW WATER CISTERN – 4,000 GALLONS REUSE
- EXISTING CISTERNS TO REMAIN – 52,800 GALLONS POTABLE

PARCEL NO. 10-19
SEE DWG. NO. C206 FOR SITE PLAN

- NEW PARKING AREA FOR 5 SPACES
- NEW CONCRETE PAVED WALKWAY SYSTEM
- NEW SANITARY SEWER TREATMENT FACILITY WITH WATER RECYCLING/GREYWATER SYSTEM
- NEW WATER CISTERNS – 15,000 GALLONS POTABLE AND 3,000 GALLONS REUSE

REMAINDER PARCEL NO. 13 (EASTERN PORTION)
SEE DWG. NO. C202 FOR SITE PLAN

- NEW COVERED ENTRANCE AND TIMBER DECKING TO MARINA BOAT SLIPS
- NEW LOW PRESSURE SANITARY CONNECTION TO HOLDING TANK AT BUILDING 5 INTO LOW PRESSURE SEWER MAIN

OPEN SPACE AREA SCHEDULE

PARCEL	LOT (SF)	EXISTING BLDG/PARKING/ DRIVES AREA (SF)	PROPOSED BLDG/PARKING/ DRIVES AREA (SF)	EXISTING OPEN SPACE (SF)	% OF LOT	PROPOSED OPEN SPACE (SF)	% OF LOT
REMAINDER 13 (WESTERN)	33,062	11,842	15,281	21,220	64%	17,781	54%
REMAINDER 13 (EASTERN)	5,800	0	455	5,800	100%	5,345	92%
13-A	16,117	4,999	6,604	11,118	69%	9,513	59%
13-B	10,062	152	7,321	9,910	98%	2,741	27%
41-REMAINDER	42,689	1,336	24,764	41,353	97%	17,925	42%
10-17 AND 10-18 (COMBINED)	23,653	0	7,240	23,653	100%	16,413	69%
10-19	10,410	2,950	2,950	7,460	72%	7,460	72%
TOTALS	**141,793**	**21,279**	**64,615**	**120,514**	**85%**	**77,178**	**54%**

BUILDING AREA SCHEDULE

PARCEL	ID	EXISTING SF	PROPOSED SF
REMAINDER 13 (WESTERN)	B1	0	300
	B2	2505	2505
	B3	350	350
	B4	240	240
	B5	2635	2455
	A8	55	55
	GD	370	370
	SB	0	2400
	AB-TBR	345	0
	AB-TBR	35	0
	AB-TBR	88	0
	AB-TBR	41	0
SUB TOTAL		**6664**	**8675**
REMAINDER 13 (EASTERN)	B6	0	455
SUB TOTAL		**0**	**455**
13-A	B7	3345	3345
	AB-TBR	40	0
	AB-TBR	65	0
SUB TOTAL		**3450**	**3345**
41-REMAINDER	B8	0	1200
	B9	0	4945
	AB-TBR	545	0
SUB TOTAL		**545**	**6145**
10-17 AND 10-18 (COMBINED)	B10	0	5035
	B11	0	2185
SUB TOTAL		**0**	**7240**
10-19	B12	915	915
	B13	1325	1325
SUB TOTAL		**2240**	**2240**
TOTALS		**12,899**	**28,100**

AB= ACCESSORY BUILDING GD= GAZEBO DECK
TBR= TO BE REMOVED SB=STORAGE, FUEL AND WASTE ENCLOSURE

OFF STREET PARKING SCHEDULE

USE	UNIT	QTY.	RATIO	REQUIRED PS
RESTAURANT	SEATS	232	1PS:10 SEATS	24
RETAIL BUILDINGS/ MARINA OFFICE	GSF	19,346	1PS:500 GSF	39
MARINA	SLIPS	145	1PS:5 SLIPS	29
EMPLOYEES (1)	EMPLOYEE	90	1PS:5 EMPLOYEES	18
APARTMENTS	UNIT	2	1PS:UNIT	2
SHORT TERM RENTAL	UNIT	6	1PS:UNIT	6
MANAGER UNITS	UNIT	2	1PS:UNIT	2
TOTAL NUMBER REQUIRED				120
TOTAL NUMBER PROVIDED ON PLAN				120
LOADING SPACES PROVIDED ON PLAN				5

GSF; GROSS SQUARE FEET
PS; PARKING SPACE
(1) MAXIMUM PER SHIFT

ADA PARKING SPACE BREAKDOWN

TYPE	REQUIRED	PROVIDED
ADA VAN ACCESSIBLE SPACES	3	5
ADA ACCESSIBLE SPACES	5	5

PROPOSED OFF STREET PARKING SCHEDULE

PARCEL	SPACES		
	OFF STREET	ADA	LOADING
REMAINDER 13 (WESTERN)	13	2	2
REMAINDER 13 (EASTERN)	0	0	0
13-A	8	1	0
13-B	17	0	0
41-REMAINDER	66	2	3
10-17 AND 10-18 (COMBINED)	7	0	0
10-19	5	0	0
TOTAL	116	5	5

ZONING BUILDING USE SCHEDULE

ID	EXISTING USE	PROPOSED USE	PERMITTED USE	FOOTPRINT (SF)	PROPOSED USE RETAIL (GSF)	RESTAURANT (SEATS)	OUTDOOR DECK (GSF)	MARINA SLIPS (SLIPS)	MARINA OFFICE (SF)	EMPLOYEES (2) (EMPLOYEE)	APARTMENTS (UNIT)
B1	N/A	GOLF CART PARKING	Y		300						
B2	RETAIL; CONCESSION	NO CHANGE IN USE	Y		2,505					4	
B3	RESTAURANT; KITCHEN	NO CHANGE IN USE	Y		350	60				8	
B4	PUBLIC REST AND BATH ROOM	NO CHANGE IN USE	Y		240						
B5	RETAIL; CONCESSION	REMODELED - RETAIL; MULTI-USE OFFICE (1)	Y		2,455					6	
GD	TAVERN; RESTAURANT SEATING	NO CHANGE IN USE	Y		1,355	18				2	
B6	N/A	CONNECTION (3)	Y		500			45			
B7	RESTAURANT; APARTMENTS; POOL	RESTAURANT; MARINA OFFICE; APARTMENTS	Y		2,810	56	2,070		350	9	2
B8	N/A	RETAIL; FARMERS MARKET	Y		1,205	1,205				10	
B9	N/A	RETAIL	Y		4,945	4,945				10	
B10	N/A	RETAIL; RESTAURANT; APARTMENTS (4)	Y		5,052	5,052	50	50		20	3
B11	N/A	RETAIL; APARTMENTS (4)	Y		2,184	2,184		50		13	3
B12	HOTEL	OFFICE (5); SHOWER (6); APARTMENTS (7)	Y		915				350	2	2
B13	RESTURANT	RESTAURANT	Y		1,325	48	710			6	
			TOTAL		18,646	232		145	700	90	

(1) CUSTOMS; IMMIGRATION; HOMELAND SECURITY; MARINA TERMINAL
(2) MAXIMUM PER SHIFT
(3) LAND TO SEA CONNECTION
(4) SHORT TERM RENTAL UNITS
(5) MARINA MAINTENANCE
(6) MARINA MAINTENANCE CREW
(7) MARINA MANAGER
(SF) SQUARE FEET
(GSF) GROSS SQUARE FEET

SITE PLAN LEGEND

- GEN — NEW GENERATOR ON CONCRETE PAD
- WWTP — NEW INDIVIDUAL ON-LOT WASTE WATER TREATMENT PLANT FACILITY
- RW 4K — NEW RECYCLED WATER CISTERN WITH CAPACITY IN THOUSANDS OF GALLONS
- PW 4K — NEW POTABLE WATER CISTERN WITH CAPACITY IN THOUSANDS OF GALLONS
- RW — NEW POTABLE WATER CISTERN – ABOVE GROUND PLASTIC
- PW — NEW RECYCLED WATER CISTERN – ABOVE GROUND PLASTIC

LEGEND

- Right of Way Line
- Property Line
- Storm Sewer Pipe
- Fence Line
- Contour
- Building Adjacent
- Building
- Roof Overhang
- FEMA 100Yr Floodplain
- Soil Boundry with Soil Types
- +0.00 Spot Elevation
- Inlet Storm Sewer Inlet
- Headwall Storm Sewer Headwall
- Manhole
- Dry Stone Retaining Wall
- Signs
- Trees
- Cist. Existing Cistern
- Curb Existing Curb
- Conc. Pvg. Existing Concrete Paving
- Fnc Existing Fence
- Gncp Existing Generator on Concrete Pad
- Open Space Existing Open Space Area
- Ramp Existing Ramp
- Sptc. Existing Septic
- Strs Existing Stairs
- Stlg Existing Stairs and Landing
- Xfcp Existing Transformer on Concrete Pad
- BUILDING
- PAVEMENT TO BE REMOVED
- FUTURE BUILDING
- NEW PEDESTRIAN UNIT PAVERS
- NEW LANDSCAPE AREA
- NEW CONCRETE PAVING
- NEW CONCRETE SIDEWALK
- NEW PERMEABLE PAVERS
- NEW PERMANENT TURF REINFORCEMENT MATTING
- NEW ROCK STABILIZATION BLANKET
- NEW CONTOUR
- +0.00 NEW SPOT GRADE
- PARKING SPACES
- MH NEW MANHOLE
- OTS NEW OUTLET STRUCTURE
- SD NEW SEDIMENT TRAP
- ST NEW STORM LINE
- S NEW SANITARY LINE
- FM NEW SANITARY FORCE MAIN
- W NEW WATER LINE
- RW NEW RECYCLED WATER LINE
- E NEW UNDERGROUND ELECTRIC LINE
- NEW UNDERGROUND STORM WATER MANAGEMENT AREA
- NEW VERTICAL STONE INTERCEPTOR DRAIN
- NEW TRENCH DRAIN
- NEW END WALL

GRAPHIC SCALE
0 15 30 60 120

YACHT CLUB AT SUMMER'S END

CORAL BAY, ST. JOHN, USVI

Prepared for:
The Summer's End Group, LLC
5000 Estate Enighed, Suite 63
St. John, USVI 00830
340.777.9075

SEAL:

PROFESSIONAL ENGINEER — JOSEPH A. MINA 1049E — VIRGIN ISLANDS

Documents prepared by Cairone & Kaupp, Incorporated are instruments of service for use solely with respect to this Project and unless otherwise provided, Cairone & Kaupp, Incorporated shall be deemed the author of these documents and shall retain all common law, statutory and other reserved rights, including the copyright. They are not intended or represented to be suitable for reuse by Owner or others on extension of the Project or on any other project. Any reuse without written verification or adoption by Cairone & Kaupp, Incorporated will be at Owner's sole risk and without liability or legal exposure to Cairone & Kaupp, Incorporated; and Owner shall indemnify and hold harmless Cairone & Kaupp, Incorporated from all claims, damages, losses and expenses including attorney's fees arising out of or resulting therefrom.

Date	No.	Revision	By
06-23-14	1	FINAL CZM SUBMISSION	JAM

ENVIRONMENTAL:
Bioimpact, Inc.
P.O. Box 132 Kingshill
St. Croix, U.S. Virgin Islands 00851
340 690-8445 Fax 340 718-3800
bioimpact.islands.vi@gmail.com

SURVEY:
MARVIN BERNING & ASSOCIATES
LAND SURVEYORS SUBDIVISION PLANNING PROPERTY SURVEYS
6501 Red Hook Plaza, Suite 201,
Saint Thomas,VI 00802-1306
340-775-6557 email: bgvisurvey@gmail.com

TRAFFIC:
HCA TRANSPORTATION AND TRAFFIC ENGINEERING
4950 York Road – Suite 2C
Holicong, Pennsylvania 18928-031
(267) 544-0508

PRIME:
Applied Technology & Management, Inc.
411 Pablo Avenue
Jacksonville Beach, FL 32250
O: 904-249-8009
www.appliedtm.com
Coastal, Environmental, Marine, and Water Resource Engineering

CIVIL:
Cairone & Kaupp, Inc.
Landscape Architecture
Civil Engineering
1118 East Columbia Avenue
Philadelphia, PA 19125 4206
Phone: 215 291 2800
Fax: 215 291 2804
www.caironekaupp.com

Drawing Title:
SITE PLAN
PROJECT AREA

Project No.: 1220	Drawing No.: C200
Drawn By: RMB	
Approved By: JAM	
Scale: 1" = 30'	
Date: 28MAR14	Sheet 3 of 15

P:\2012\1220-usvi marina\Cad\Current\1220C-C200.dwg | Jun 23, 2014 - 1:36pm | JMina | Cairone & Kaupp, Inc.

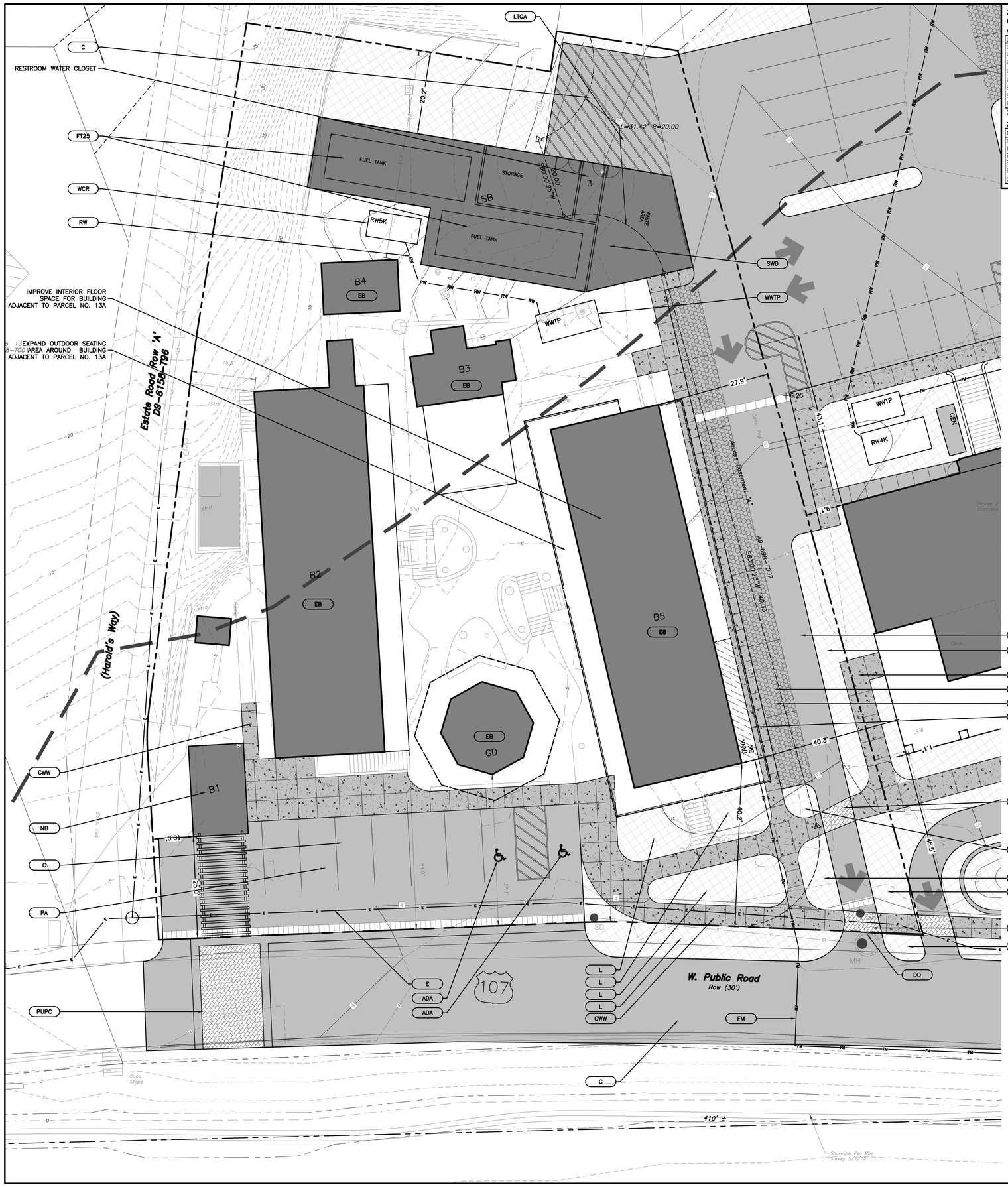

ZONING SCHEDULE PARCEL NO. REMAINDER 13 (WESTERN PORTION) - 0.759 Ac.

W-1 WATERFRONT PLEASURE DISTRICT

DESCRIPTION	PERMITTED	EXISTING	PROPOSED
LOT AREA (MIN)	10,000 SF	33,062 SF	33,062 SF
LOT OCCUPANCY (MAX)	40%	6,664 SF; 20%	8,675 SF; 26%
LOT OPEN SPACE (MIN)	30%	21,220 SF; 64%	17,781 SF; 54%
LOT DENSITY (MAX); (1)	N/A	N/A	N/A
LOT WIDTH (MIN)	100 FT	187.9 FT	187.9 FT
FRONT YARD SETBACK (MIN)	25 FT	19.9 FT	25.0 FT
SIDE YARD SETBACK (MIN)	10 FT	11.2 FT	10.0 FT
REAR YARD SETBACK (MIN)	20 FT	51.6 FT	20.2 FT

(1) HOUSING NOT PROPOSED

ZONING BUILDING HEIGHT SCHEDULE

ID	EXISTING HEIGHT	PROPOSED HEIGHT	PERMITTED HEIGHT
B1	N/A	1 STORY	3 STORIES
B2	1 STORY	N/A	3 STORIES
B3	1 STORY	N/A	3 STORIES
B4	1 STORY	N/A	3 STORIES
B5	1 STORY	N/A	3 STORIES
CY1G	1 STORY	N/A	3 STORIES

GENERAL NOTES

1. CONTRACTOR SHALL INSPECT AND VERIFY ALL FIELD DIMENSIONS AND SITE CONDITIONS SHOWN HEREIN BEFORE PROCEEDING WITH THE WORK. DISCREPANCIES BETWEEN FIELD CONDITIONS AND THESE PLANS SHALL BE BROUGHT TO THE ENGINEER'S ATTENTION PRIOR TO ANY COMMENCEMENT OF THE WORK. ONCE CONSTRUCTION HAS BEGUN CONTRACTOR SHALL NOT USE FIELD INFORMATION DISCREPANCIES AS THE BASIS FOR CHANGE ORDER CLAIMS.
2. THE LOCATION OF EXISTING UNDERGROUND UTILITIES ARE SHOWN IN AN APPROXIMATE WAY ONLY AND HAVE NOT BEEN INDEPENDENTLY VERIFIED. THE CONTRACTOR SHALL DETERMINE THE EXACT LOCATION OF ALL EXISTING UTILITIES BEFORE COMMENCING WORK, AND AGREES TO BE FULLY RESPONSIBLE FOR ANY AND ALL DAMAGES WHICH MIGHT BE OCCASIONED BY THE CONTRACTORS FAILURE TO EXACTLY LOCATE AND PRESERVE ANY AND ALL UNDERGROUND UTILITIES.

KEY

ADA	PROVIDE ADA PARKING SPACES
C	PROVIDE CONCRETE PAVING
CWW	PROVIDE CONCRETE PAVED WALKWAY
DO	PROVIDE DRIVEWAY OPENING
E	PROVIDE UNDERGROUND ELECTRIC LINE
EB	*Existing Building To Remain*
FT25	PROVIDE 25,000 GALLON AG FUEL OIL TANK
L	PROVIDE LANDSCAPE AREA
LTQA	PROVIDE LOADING AND TAXI QUEUING AREA
NB	NEW BUILDING
PA	PROVIDE PARKING
PP	PROVIDE PERMEABLE PAVERS
PUP	PROVIDE PEDESTRIAN UNIT PAVER
PUPC	PROVIDE RAISED PEDESTRIAN UNIT PAVER CROSSWALK
RTWL	PROVIDE RETAINING WALL
STLG	PROVIDE STAIRS AND LANDING
STRS	PROVIDE STAIRS
SWD	PROVIDE SOLID WASTE DUMPSTER
RW	PROVIDE RECYCLED WATER LINE
WCP	PROVIDE POTABLE WATER CISTERN
WCR	PROVIDE RECYCLED WATER CISTERN
WWTP	PROVIDE WASTEWATER TREATMENT PLANT
WWHT	PROVIDE WASTEWATER HOLDING TANK

LEGEND

Right of Way Line
Property Line
Storm Sewer Pipe
Fence Line
Contour
Building Adjacent
Building
Roof Overhang
FEMA 100Yr Floodplain
Soil Boundry with Soil Types
Spot Elevation
Storm Sewer Inlet
Storm Sewer Headwall
Manhole
Dry Stone Retaining Wall
Signs
Trees
Cist. *Existing Cistern*
Curb *Existing Curb*
Conc. Pvg. *Existing Concrete Paving*
Fnc *Existing Fence*
Gncp *Existing Generator on Concrete Pad*
Open Space *Existing Open Space Area*
Ramp *Existing Ramp*
Sptc. *Existing Septic*
Strs *Existing Stairs*
Stlg *Existing Stairs and Landing*
Xfcp *Existing Transformer on Concrete Pad*
BUILDING
PAVEMENT TO BE REMOVED
FUTURE BUILDING
NEW PEDESTRIAN UNIT PAVERS
NEW LANDSCAPE AREA
NEW CONCRETE PAVING
NEW CONCRETE SIDEWALK
NEW PERMEABLE PAVERS
NEW PERMANENT TURF REINFORCEMENT MATTING
NEW ROCK STABILIZATION BLANKET
NEW CONTOUR
+0.00 NEW SPOT GRADE
PARKING SPACES
MH NEW MANHOLE
OTS NEW OUTLET STRUCTURE
SD NEW SEDIMENT TRAP
ST NEW STORM LINE
S NEW SANITARY LINE
FM NEW SANITARY FORCE MAIN
W NEW WATER LINE
RW NEW RECYCLED WATER LINE
E NEW UNDERGROUND ELECTRIC LINE
NEW UNDERGROUND STORM WATER MANAGEMENT AREA
NEW VERTICAL STONE INTERCEPTOR DRAIN
NEW TRENCH DRAIN
NEW END WALL

GRAPHIC SCALE
0 5 10 20 40

YACHT CLUB AT SUMMER'S END

CORAL BAY, ST. JOHN, USVI

Prepared for:
The Summer's End Group, LLC
5000 Estate Enighed, Suite 63
St. John, USVI 00830
340.777.9075

SEAL:

PROFESSIONAL ENGINEER
JOSEPH A. MINA
1049E
U.S. VIRGIN ISLANDS

Documents prepared by Cairone & Kaupp, Incorporated are instruments of service for use solely with respect to this Project and unless otherwise provided, Cairone & Kaupp, Incorporated shall be deemed the author of these documents and shall retain all common law, statutory and other reserved rights, including the copyright. They are not intended or represented to be suitable for reuse by Owner or others on extension of the Project or on any other project. Any reuse without written verification or adoption by Cairone & Kaupp, Incorporated will be at Owner's sole risk and without liability or legal exposure to Cairone & Kaupp, Incorporated; and Owner shall indemnify and hold harmless Cairone & Kaupp, Incorporated from all claims, damages, losses and expenses including attorney's fees arising out of or resulting therefrom.

Date	No.	Revision	By
06-23-14	1	FINAL CZM SUBMISSION	JAM

ENVIRONMENTAL:
Bioimpact, Inc.
P.O. Box 132 Kingshill
St. Croix, U.S. Virgin Islands 00851
340 690-8445 Fax 340 718-3800
bioimpact.islands.vi@gmail.com

SURVEY:
MARVIN BERNING & ASSOCIATES
LAND SURVEYORS SUBDIVISION PLANNING PROPERTY SURVEYS
6501 Red Hook Plaza, Suite 201,
Saint Thomas,VI 00802-1306
340-775-6557 email: bgsinurvey@gmail.com

TRAFFIC:
HCA Hoover & Keller Associates
TRANSPORTATION AND TRAFFIC ENGINEERING
4950 York Road - Suite 2C
Holicong, Pennsylvania 18928-031
(267) 544-0508
Medford, New Jersey 08055
(609) 654-4884

PRIME:
APPLIED TECHNOLOGY & MANAGEMENT
Applied Technology & Management, Inc.
411 Pablo Avenue
Jacksonville Beach, FL 32250
O: 904-246-8080
www.appliedtm.com
Coastal, Environmental, Marine, and Water Resource Engineering

CIVIL:
Cairone & Kaupp, Inc.
Landscape Architecture
Civil Engineering
1118 East Columbia Avenue
Philadelphia, PA 19125 4206
Phone: 215 291 2800
Fax: 215 291 2804
www.caironekaupp.com

Drawing Title:

SITE PLAN

REMAINDER PARCEL NO. 13
(WESTERN PORTION)

Project No.: 1220	Drawing No.: C201
Drawn By: RMB	
Approved By: JAM	
Scale:	
Date: 28MAR14	Sheet 4 of 15

P:\2012\1220-usvi marina\Cad\Current\1220C-C201-C206.dwg | Jun 23, 2014 - 1:36pm | JMina | Cairone & Kaupp, Inc.

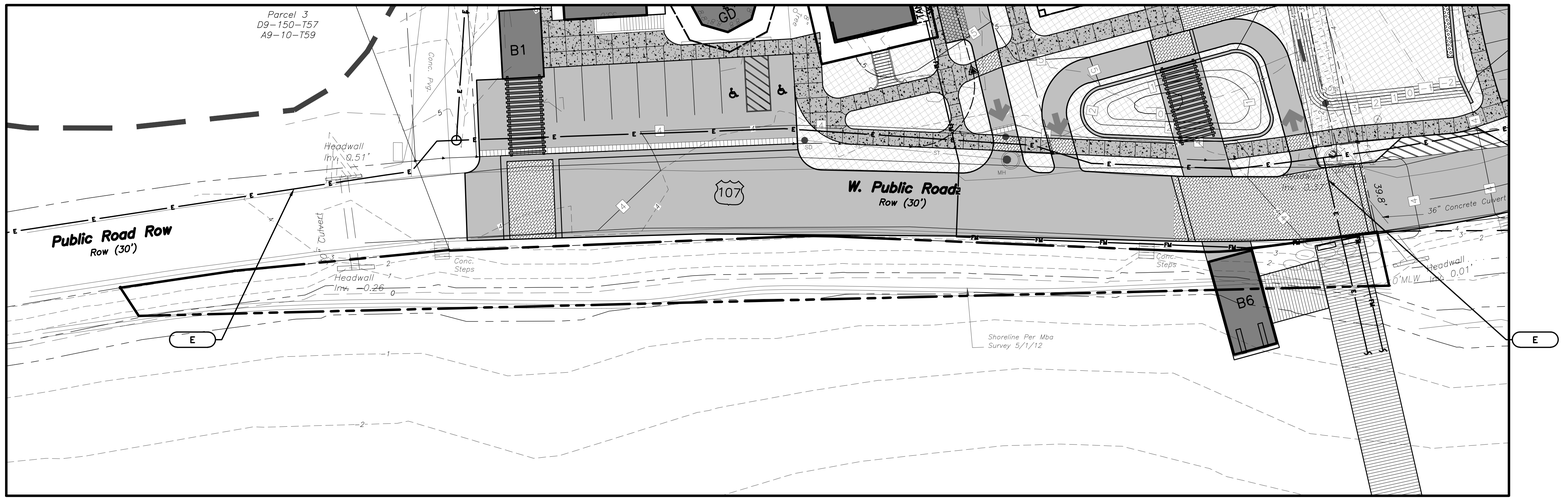

GRAPHIC SCALE

0 10 20 40 80

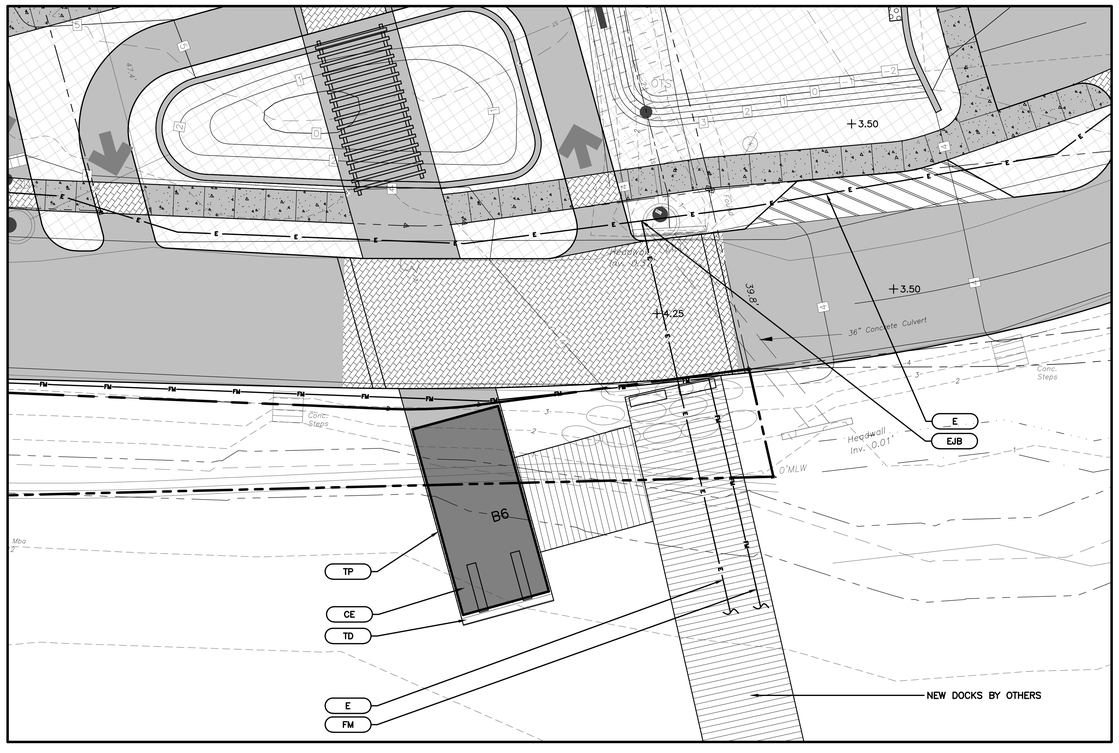

GRAPHIC SCALE

0 5 10 20 40

ZONING SCHEDULE PARCEL NO. REMAINDER 13
(EASTERN PORTION) - 0.133 Ac.

W-1 WATERFRONT PLEASURE DISTRICT

DESCRIPTON	PERMITTED	EXISTING	PROPOSED
LOT AREA (MIN)	10,000 SF	5,800 SF	5,800 SF
LOT OCCUPANCY (MAX)	40%	0 SF; 0%	455 SF; 8%
LOT OPEN SPACE (MIN)	30%	5,800 SF; 100%	5,345 SF; 92%
LOT DENSITY (MAX); (1)	N/A	N/A	N/A
LOT WIDTH (MIN)	100 FT	411.02 FT	411.02 FT
FRONT YARD SETBACK (MIN)	25 FT	N/A (2)	N/A (2)
SIDE YARD SETBACK (MIN)	10 FT	N/A (2)	N/A (2)
REAR YARD SETBACK (MIN)	20 FT	N/A (2)	N/A (2)

(1) HOUSING NOT PROPOSED
(2) MARINA DEVELOPMENT

BUILDING HEIGHT SCHEDULE

ID	EXISTING HEIGHT	PROPOSED HEIGHT	PERMITTED HEIGHT
B6	N/A	1 STORY	3 STORIES

GENERAL NOTES

1. CONTRACTOR SHALL INSPECT AND VERIFY ALL FIELD DIMENSIONS AND SITE CONDITIONS SHOWN HEREIN BEFORE PROCEEDING WITH THE WORK. DISCREPANCIES BETWEEN FIELD CONDITIONS AND THESE PLANS SHALL BE BROUGHT TO THE ENGINEER'S ATTENTION PRIOR TO ANY COMMENCEMENT OF THE WORK. ONCE CONSTRUCTION HAS BEGUN CONTRACTOR SHALL NOT USE FIELD INFORMATION DISCREPANCIES AS THE BASIS FOR CHANGE ORDER CLAIMS.
2. THE LOCATION OF EXISTING UNDERGROUND UTILITIES ARE SHOWN IN AN APPROXIMATE WAY ONLY AND HAVE NOT BEEN INDEPENDENTLY VERIFIED. THE CONTRACTOR SHALL DETERMINE THE EXACT LOCATION OF ALL EXISTING UTILITIES BEFORE COMMENCING WORK, AND AGREES TO BE FULLY RESPONSIBLE FOR ANY AND ALL DAMAGES WHICH MIGHT BE OCCASIONED BY THE CONTRACTORS FAILURE TO EXACTLY LOCATE AND PRESERVE ANY AND ALL UNDERGROUND UTILITIES.

KEY

- CE — PROVIDE COVERED ENTRANCE
- E — PROVIDE UNDERGROUND ELECTRIC LINE
- EJB — PROVIDE UNDERGROUND ELECTRIC JUNCTION BOX
- TD — PROVIDE TYPICAL DOCK DECKING
- TP — PROVIDE TIMBER PERGOLA

LEGEND

- Right of Way Line
- Property Line
- Storm Sewer Pipe
- Fence Line
- Contour
- Building Adjacent
- Building
- Roof Overhang
- FEMA 100Yr Floodplain
- Soil Boundry with Soil Types
- +0.00 Spot Elevation
- Inlet — Storm Sewer Inlet
- Headwall — Storm Sewer Headwall
- Manhole
- Dry Stone Retaining Wall
- Signs
- Trees
- Cist. — Existing Cistern
- Curb — Existing Curb
- Conc. Pvg. — Existing Concrete Paving
- Fnc — Existing Fence
- Gncp — Existing Generator on Concrete Pad
- Open Space — Existing Open Space Area
- Ramp — Existing Ramp
- Sptc. — Existing Septic
- Strs — Existing Stairs
- Stlg — Existing Stairs and Landing
- Xfcp — Existing Transformer on Concrete Pad
- BUILDING
- PAVEMENT TO BE REMOVED
- FUTURE BUILDING
- NEW PEDESTRIAN UNIT PAVERS
- NEW LANDSCAPE AREA
- NEW CONCRETE PAVING
- NEW CONCRETE SIDEWALK
- NEW PERMEABLE PAVERS
- NEW PERMANENT TURF REINFORCEMENT MATTING
- NEW ROCK STABILIZATION BLANKET
- 0 — NEW CONTOUR
- +0.00 — NEW SPOT GRADE
- 0 — PARKING SPACES
- MH — NEW MANHOLE
- OTS — NEW OUTLET STRUCTURE
- SD — NEW SEDIMENT TRAP
- ST — NEW STORM LINE
- S — NEW SANITARY LINE
- FM — NEW SANITARY FORCE MAIN
- W — NEW WATER LINE
- RW — NEW RECYCLED WATER LINE
- E — NEW UNDERGROUND ELECTRIC LINE
- NEW UNDERGROUND STORM WATER MANAGEMENT AREA
- NEW VERTICAL STONE INTERCEPTOR DRAIN
- NEW TRENCH DRAIN
- NEW END WALL

YACHT CLUB AT SUMMER'S END
CORAL BAY, ST. JOHN, USVI
Prepared for:
The Summer's End Group, LLC
5000 Estate Enighed, Suite 63
St. John, USVI 00830
340.777.9075

SEAL:

PROFESSIONAL ENGINEER — JOSEPH A. MINA 1049E — VIRGIN ISLANDS

Documents prepared by Cairone & Kaupp, Incorporated are instruments of service for use solely with respect to this Project and unless otherwise provided, Cairone & Kaupp, Incorporated shall be deemed the author of these documents and shall retain all common law, statutory and other reserved rights, including the copyright. They are not intended or represented to be suitable for reuse by Owner or others on extension of the Project or on any other project. Any reuse without written verification or adoption by Cairone & Kaupp, Incorporated will be at Owner's sole risk and without liability or legal exposure to Cairone & Kaupp, Incorporated; and Owner shall indemnify and hold harmless Cairone & Kaupp, Incorporated from all claims, damages, losses and expenses including attorney's fees arising out of or resulting therefrom.

Date	No.	Revision	By
06-23-14	1	FINAL CZM SUBMISSION	JAM

ENVIRONMENTAL:
Bioimpact, Inc.
P.O. Box 132 Kingshill
St. Croix, U.S. Virgin Islands 00851
340 690-8445 Fax 340 718-3800
bioimpact.islands.vi@gmail.com

SURVEY:
MARVIN BERNING & ASSOCIATES
LAND SURVEYORS SUBDIVISION PLANNING PROPERTY SURVEYS
6501 Red Hook Plaza, Suite 201,
Saint Thomas,VI 00802-1306
340-775-6557 email: bgvisurvey@gmail.com

TRAFFIC:
HCA Hoover & Keller Associates — A Partners in Consulting
TRANSPORTATION AND TRAFFIC ENGINEERING
The Station Road, Suite 3
Bedford, New Jersey 08055
(908) 234-1515
4950 York Road – Suite 2C
Holicong, Pennsylvania 18928-031
(267) 544-0508

PRIME:
ATM — APPLIED TECHNOLOGY & MANAGEMENT
Applied Technology & Management, Inc.
411 Pablo Avenue
Jacksonville Beach, FL 32250
O: 904-249-8009
www.appliedtm.com
Coastal, Environmental, Marine, and Water Resource Engineering

CIVIL:
Cairone & Kaupp, Inc.
Landscape Architecture
Civil Engineering
1118 East Columbia Avenue
Philadelphia, PA 19125 4206
Phone: 215 291 2800
Fax: 215 291 2804
www.caironekaupp.com

Drawing Title:

SITE PLAN
REMAINDER PARCEL NO. 13
(EASTERN PORTION)

Project No.: 1220	Drawing No.: C202
Drawn By: RMB	
Approved By: JAM	
Scale:	
Date: 28MAR14	Sheet 5 of 15

P:\2012\1220-usvi marina\Cad\Current\1220C-C201-C206.dwg | Jun 23, 2014 - 1:36pm | JMina | Cairone & Kaupp, Inc.

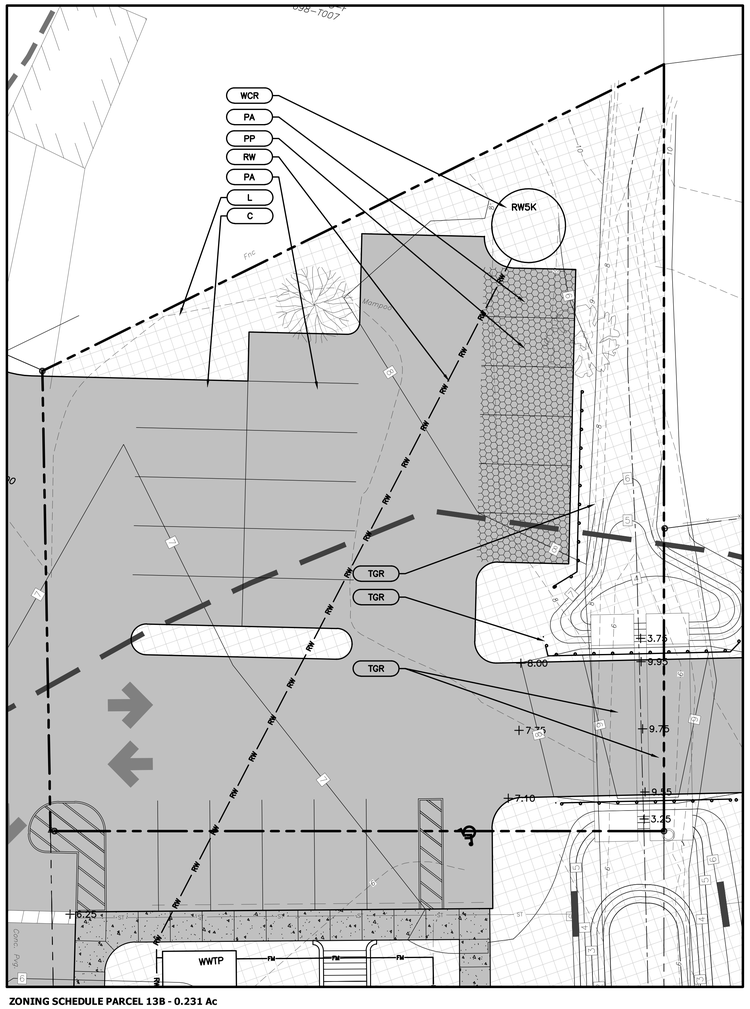

ZONING SCHEDULE PARCEL 13B - 0.231 Ac
W-1 WATERFRONT PLEASURE DISTRICT

DESCRIPTION	PERMITTED	EXISTING	PROPOSED
LOT AREA (MIN)	10,000 SF	10,062 SF	10,062 SF
LOT OCCUPANCY (MAX)	40%	0 SF; 0%	0 SF; 0%
LOT OPEN SPACE (MIN)	30%	9,910 SF; 98%	2,741 SF; 27%
LOT DENSITY (MAX); (1)	N/A	N/A	N/A
LOT WIDTH (MIN)	100 FT	99.4 FT	99.4 FT
FRONT YARD SETBACK (MIN)	25 FT	N/A FT	N/A FT
SIDE YARD SETBACK (MIN)	10 FT	N/A FT	N/A FT
REAR YARD SETBACK (MIN)	20 FT	N/A FT	N/A FT

(1) HOUSING NOT PROPOSED

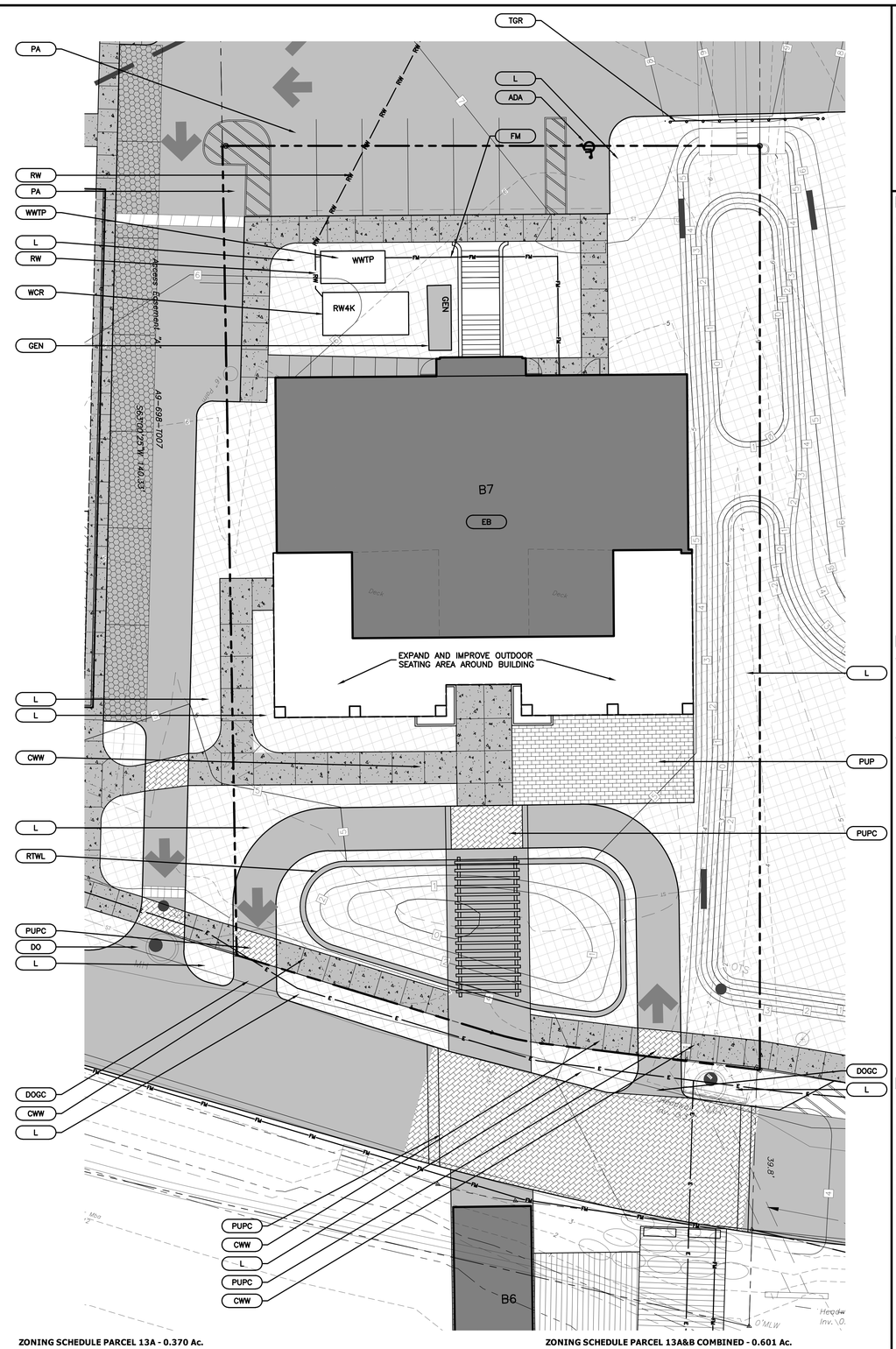

ZONING SCHEDULE PARCEL 13A - 0.370 Ac.
W-1 WATERFRONT PLEASURE DISTRICT

DESCRIPTION	PERMITTED	EXISTING	PROPOSED
LOT AREA (MIN)	10,000 SF	16,117 SF	16,117 SF
LOT OCCUPANCY (MAX)	40%	3,450 SF; 21%	3,450 SF; 21%
LOT OPEN SPACE (MIN)	30%	11,118 SF; 69%	9,513 SF; 59%
LOT DENSITY (MAX)	2 UNITS	2 UNITS	2 UNITS
LOT WIDTH (MIN)	100 FT	90.46 FT	90.46 FT
FRONT YARD SETBACK (MIN)	25 FT	46.5 FT	46.5 FT
SIDE YARD SETBACK (MIN)	10 FT	7.9 FT	7.9 FT
REAR YARD SETBACK (MIN)	20 FT	38.3 FT	38.3 FT
GUTT SETBACK (MIN)	25 FT (C/L)	8.4 FT	8.4 FT

ZONING BUILDING HEIGHT SCHEDULE

ID	EXISTING HEIGHT	PROPOSED HEIGHT	PERMITTED HEIGHT
B7	2 STORIES	2 STORIES	3 STORIES

ZONING SCHEDULE PARCEL 13A&B COMBINED - 0.601 Ac.
W-1 WATERFRONT PLEASURE DISTRICT

DESCRIPTION	PERMITTED	PROPOSED
LOT AREA (MIN)	10,000 SF	26,179 SF
LOT OCCUPANCY (MAX)	40%	3,450 SF; 13%
LOT OPEN SPACE (MIN)	30%	12,254 SF; 47%
LOT DENSITY (MAX)	2 UNITS	2 UNITS
LOT WIDTH (MIN)	100 FT	100.0 FT
FRONT YARD SETBACK (MIN)	25 FT	46.5 FT
SIDE YARD SETBACK (MIN)	10 FT	7.9 FT
REAR YARD SETBACK (MIN)	20 FT	127.7 FT
GUTT SETBACK (MIN)	25 FT (C/L)	8.4 FT

GENERAL NOTES

1. CONTRACTOR SHALL INSPECT AND VERIFY ALL FIELD DIMENSIONS AND SITE CONDITIONS SHOWN HEREIN BEFORE PROCEEDING WITH THE WORK. DISCREPANCIES BETWEEN FIELD CONDITIONS AND THESE PLANS SHALL BE BROUGHT TO THE ENGINEER'S ATTENTION PRIOR TO ANY COMMENCEMENT OF THE WORK. ONCE CONSTRUCTION HAS BEGUN CONTRACTOR SHALL NOT USE FIELD INFORMATION DISCREPANCIES AS THE BASIS FOR CHANGE ORDER CLAIMS.
2. THE LOCATION OF EXISTING UNDERGROUND UTILITIES ARE SHOWN IN AN APPROXIMATE WAY ONLY AND HAVE NOT BEEN INDEPENDENTLY VERIFIED. THE CONTRACTOR SHALL DETERMINE THE EXACT LOCATION OF ALL EXISTING UTILITIES BEFORE COMMENCING WORK, AND AGREES TO BE FULLY RESPONSIBLE FOR ANY AND ALL DAMAGES WHICH MIGHT BE OCCASIONED BY THE CONTRACTORS FAILURE TO EXACTLY LOCATE AND PRESERVE ANY AND ALL UNDERGROUND UTILITIES.

KEY

ADA	PROVIDE ADA PARKING SPACES
CWW	PROVIDE CONCRETE PAVED WALKWAY
CE	PROVIDE COVERED ENTRANCE
DO	PROVIDE DRIVEWAY OPENING
DOGC	PROVIDE DRIVEWAY OPENING FOR GOLF CARTS
E	PROVIDE UNDERGROUND ELECTRIC LINE
EB	*Existing Building To Remain*
GEN	PROVIDE GENERATOR
L	PROVIDE LANDSCAPE AREA
NB	NEW BUILDING
PA01	PROVIDE PARKING AREA 1
PA02	PROVIDE PARKING AREA 2
PUP	PROVIDE PEDESTRIAN UNIT PAVER
PUPC	PROVIDE RAISED PEDESTRIAN UNIT PAVER CROSSWALK
RTWL	PROVIDE RETAINING WALL
RW	PROVIDE RECYCLED WATER LINE
TD	PROVIDE TIMBER DECKING
TGR	PROVIDE TIMBER GUIDE RAIL
WWTP	PROVIDE WASTEWATER TREATMENT PLANT
WCR	PROVIDE RECYCLED WATER CISTERN

LEGEND

Right of Way Line
Property Line
Storm Sewer Pipe
Fence Line
Contour
Building Adjacent
Building
Roof Overhang
FEMA 100Yr Floodplain
Soil Boundry with Soil Types
Spot Elevation
Storm Sewer Inlet
Storm Sewer Headwall
Manhole
Dry Stone Retaining Wall
Signs
Trees
Existing Cistern
Existing Curb
Existing Concrete Paving
Existing Fence
Existing Generator on Concrete Pad
Existing Open Space Area
Existing Ramp
Existing Septic
Existing Stairs
Existing Stairs and Landing
Existing Transformer on Concrete Pad
BUILDING
PAVEMENT TO BE REMOVED
FUTURE BUILDING
NEW PEDESTRIAN UNIT PAVERS
NEW LANDSCAPE AREA
NEW CONCRETE PAVING
NEW CONCRETE SIDEWALK
NEW PERMEABLE PAVERS
NEW PERMANENT TURF REINFORCEMENT MATTING
NEW ROCK STABILIZATION BLANKET
NEW CONTOUR
NEW SPOT GRADE
PARKING SPACES
NEW MANHOLE
NEW OUTLET STRUCTURE
NEW SEDIMENT TRAP
NEW STORM LINE
NEW SANITARY LINE
NEW SANITARY FORCE MAIN
NEW WATER LINE
NEW RECYCLED WATER LINE
NEW UNDERGROUND ELECTRIC LINE
NEW UNDERGROUND STORM WATER MANAGEMENT AREA
NEW VERTICAL STONE INTERCEPTOR DRAIN
NEW TRENCH DRAIN
NEW END WALL

GRAPHIC SCALE
0 5 10 20 40

YACHT CLUB AT SUMMER'S END

CORAL BAY, ST. JOHN, USVI

Prepared for:
The Summer's End Group, LLC
5000 Estate Enighed, Suite 63
St. John, USVI 00830
340.777.9075

SEAL:

PROFESSIONAL ENGINEER
JOSEPH A. MINA
1049E
VIRGIN ISLANDS

Documents prepared by Cairone & Kaupp, Incorporated are instruments of service for use solely with respect to this Project and unless otherwise provided, Cairone & Kaupp, Incorporated shall be deemed the author of these documents and shall retain all common law, statutory and other reserved rights, including the copyright. They are not intended or represented to be suitable for reuse by Owner or others on extension of the Project or on any other project. Any reuse without written verification or adoption by Cairone & Kaupp, Incorporated will be at Owner's sole risk and without liability or legal exposure to Cairone & Kaupp, Incorporated; and Owner shall indemnify and hold harmless Cairone & Kaupp, Incorporated from all claims, damages, losses and expenses including attorney's fees arising out of or resulting therefrom.

Date	No.	Revision	By
06-23-14	1	FINAL CZM SUBMISSION	JAM

ENVIRONMENTAL:
Bioimpact, Inc.
P.O. Box 132 Kingshill
St. Croix, U.S. Virgin Islands 00851
340 690-8445 Fax 340 718-3800
bioimpact.islands.vi@gmail.com

SURVEY:
MARVIN BERNING & ASSOCIATES
LAND SURVEYORS SUBDIVISION PLANNING PROPERTY SURVEYS
6501 Red Hook Plaza, Suite 201,
Saint Thomas,VI 00802-1306
340-775-6557 email: bgvisurvey@gmail.com

TRAFFIC:
HCA TRANSPORTATION AND TRAFFIC ENGINEERING
4 Penn Center Boulevard
Suite 1000
Philadelphia, PA 19103
(267) 519-6500
Fax (267) 519-6501
4950 York Road – Suite 2C
Hollsopple, Pennsylvania 18928-031
(267) 544-2508
Princeton Corporate Center
Suite F
Ewing, New Jersey 08628
(609) 654-4104

PRIME:
APPLIED TECHNOLOGY & MANAGEMENT
Applied Technology & Management, Inc.
411 Pablo Avenue
Jacksonville Beach, FL 32250
O: 904-249-8009
www.appliedtm.com
Coastal, Environmental, Marine, and Water Resource Engineering

CIVIL:
Cairone & Kaupp, Inc.
Landscape Architecture
Civil Engineering
1118 East Columbia Avenue
Philadelphia, PA 19125 4206
Phone: 215 291 2800
Fax: 215 291 2804
www.caironekaupp.com

Drawing Title:
SITE PLAN
PARCEL NO. 13-A
PARCEL NO. 13-B

Project No.: 1220	Drawing No.: C203
Drawn By: RMB	
Approved By: JAM	
Scale:	
Date: 28MAR14	Sheet 6 of 15

P:\2012\1220-usvi marina\Cad\Current\1220C-C201-C206.dwg | Jun 23, 2014 - 1:36pm | JMina | Cairone & Kaupp, Inc.

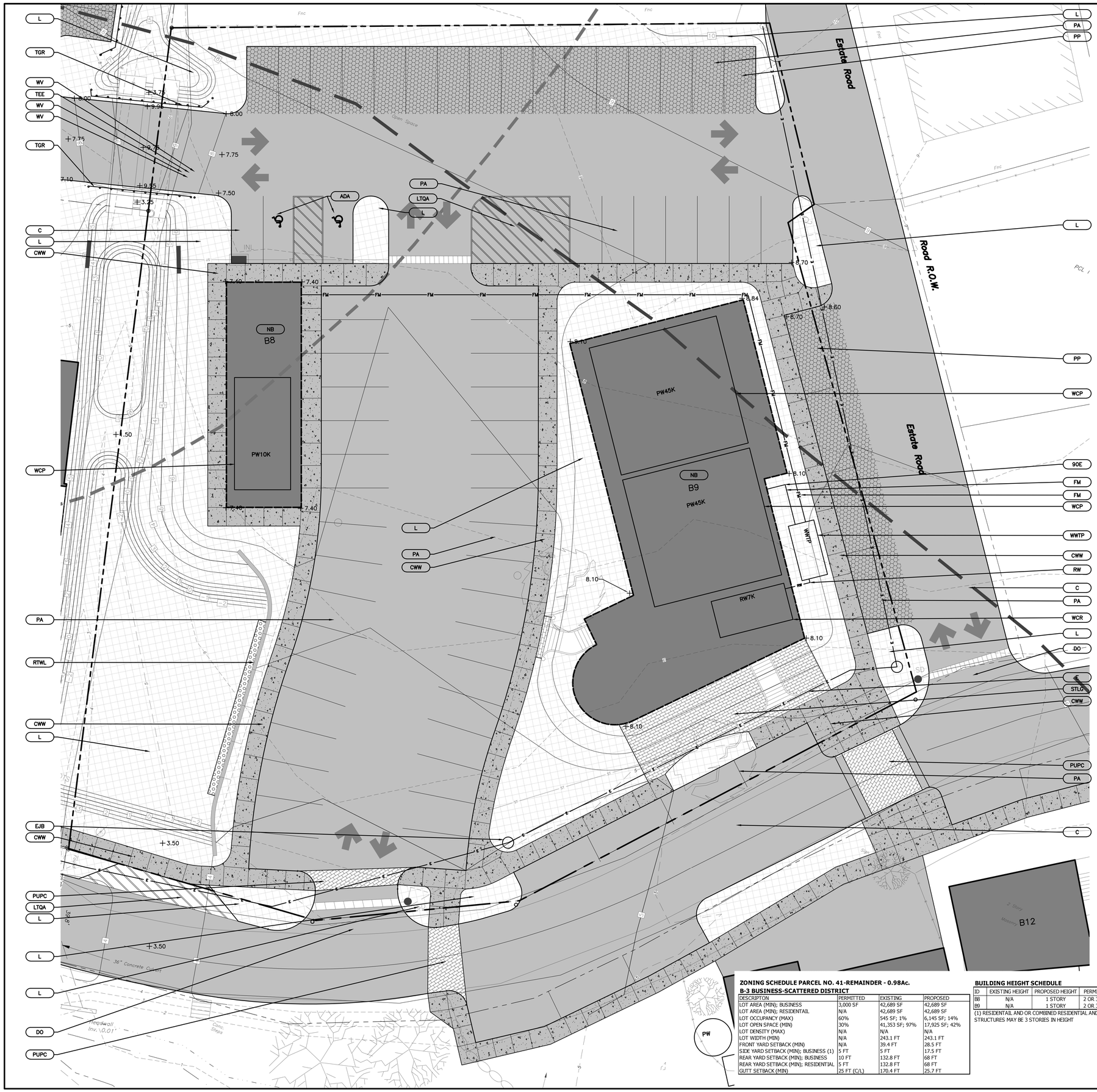

GENERAL NOTES

1. CONTRACTOR SHALL INSPECT AND VERIFY ALL FIELD DIMENSIONS AND SITE CONDITIONS SHOWN HEREIN BEFORE PROCEEDING WITH THE WORK. DISCREPANCIES BETWEEN FIELD CONDITIONS AND THESE PLANS SHALL BE BROUGHT TO THE ENGINEER'S ATTENTION PRIOR TO ANY COMMENCEMENT OF THE WORK. ONCE CONSTRUCTION HAS BEGUN CONTRACTOR SHALL NOT USE FIELD INFORMATION DISCREPANCIES AS THE BASIS FOR CHANGE ORDER CLAIMS.
2. THE LOCATION OF EXISTING UNDERGROUND UTILITIES ARE SHOWN IN AN APPROXIMATE WAY ONLY AND HAVE NOT BEEN INDEPENDENTLY VERIFIED. THE CONTRACTOR SHALL DETERMINE THE EXACT LOCATION OF ALL EXISTING UTILITIES BEFORE COMMENCING WORK, AND AGREES TO BE FULLY RESPONSIBLE FOR ANY AND ALL DAMAGES WHICH MIGHT BE OCCASIONED BY THE CONTRACTORS FAILURE TO EXACTLY LOCATE AND PRESERVE ANY AND ALL UNDERGROUND UTILITIES.

KEY

ADA	PROVIDE ADA PARKING SPACES
C	PROVIDE CONCRETE PAVING
CWW	PROVIDE CONCRETE PAVED WALKWAY
DO	PROVIDE DRIVEWAY OPENING
DWBS	PROVIDE DOMESTIC WATER BUILDING SERVICE
E	PROVIDE UNDERGROUND ELECTRIC LINE
EJB	PROVIDE UNDERGROUND ELECTRIC JUNCTION BOX
L	PROVIDE LANDSCAPE AREA
LTQA	PROVIDE LOADING AND TAXI QUEUING AREA
NB	NEW BUILDING
PA	PROVIDE PARKING
PP	PROVIDE PERMEABLE PAVERS
PUPC	PROVIDE RAISED PEDESTRIAN UNIT PAVER CROSSWALK
RTWL	PROVIDE RETAINING WALL
RW	PROVIDE RECYCLED WATER LINE
STLG	PROVIDE STAIRS AND LANDING
TEE	PROVIDE TEE FITTING
WCP	PROVIDE POTABLE WATER CISTERN
WCR	PROVIDE RECYCLED WATER CISTERN
WWTP	PROVIDE WASTEWATER TREATMENT PLANT

LEGEND

- Right of Way Line
- Property Line
- Storm Sewer Pipe
- Fence Line
- Contour
- Building Adjacent
- Building
- Roof Overhang
- FEMA 100Yr Floodplain
- Soil Boundry with Soil Types
- +0.00 Spot Elevation
- Inlet Storm Sewer Inlet
- Headwall Storm Sewer Headwall
- Manhole
- Dry Stone Retaining Wall
- Signs
- Trees
- Cist. Existing Cistern
- Curb Existing Curb
- Conc. Pvg. Existing Concrete Paving
- Fnc Existing Fence
- Gncp Existing Generator on Concrete Pad
- Open Space Existing Open Space Area
- Ramp Existing Ramp
- Sptc. Existing Septic
- Strs Existing Stairs
- Stlg Existing Stairs and Landing
- Xfcp Existing Transformer on Concrete Pad
- BUILDING
- PAVEMENT TO BE REMOVED
- FUTURE BUILDING
- NEW PEDESTRIAN UNIT PAVERS
- NEW LANDSCAPE AREA
- NEW CONCRETE PAVING
- NEW CONCRETE SIDEWALK
- NEW PERMEABLE PAVERS
- NEW PERMANENT TURF REINFORCEMENT MATTING
- NEW ROCK STABILIZATION BLANKET
- NEW CONTOUR
- +0.00 NEW SPOT GRADE
- PARKING SPACES
- MH NEW MANHOLE
- OTS NEW OUTLET STRUCTURE
- SD NEW SEDIMENT TRAP
- ST NEW STORM LINE
- S NEW SANITARY LINE
- FM NEW SANITARY FORCE MAIN
- W NEW WATER LINE
- RW NEW RECYCLED WATER LINE
- E NEW UNDERGROUND ELECTRIC LINE
- NEW UNDERGROUND STORM WATER MANAGEMENT AREA
- NEW VERTICAL STONE INTERCEPTOR DRAIN
- NEW TRENCH DRAIN
- NEW END WALL

GRAPHIC SCALE

0 5 10 20 40

ZONING SCHEDULE PARCEL NO. 41-REMAINDER - 0.98Ac.
B-3 BUSINESS-SCATTERED DISTRICT

DESCRIPTON	PERMITTED	EXISTING	PROPOSED
LOT AREA (MIN); BUSINESS	3,000 SF	42,689 SF	42,689 SF
LOT AREA (MIN); RESIDENTAIL	N/A	42,689 SF	42,689 SF
LOT OCCUPANCY (MAX)	60%	545 SF; 1%	6,145 SF; 14%
LOT OPEN SPACE (MIN)	30%	41,353 SF; 97%	17,925 SF; 42%
LOT DENSITY (MAX)	N/A	N/A	N/A
LOT WIDTH (MIN)	N/A	243.1 FT	243.1 FT
FRONT YARD SETBACK (MIN)	N/A	39.4 FT	28.5 FT
SIDE YARD SETBACK (MIN); BUSINESS (1)	5 FT	5 FT	17.5 FT
REAR YARD SETBACK (MIN); BUSINESS	10 FT	132.8 FT	68 FT
REAR YARD SETBACK (MIN); RESIDENTIAL	5 FT	132.8 FT	68 FT
GUTT SETBACK (MIN)	25 FT (C/L)	170.4 FT	25.7 FT

BUILDING HEIGHT SCHEDULE

ID	EXISTING HEIGHT	PROPOSED HEIGHT	PERMITTED HEIGHT
B8	N/A	1 STORY	2 OR 3 STORIES (1)
B9	N/A	1 STORY	2 OR 3 STORIES (1)

(1) RESIDENTAIL AND OR COMBINED RESIDENTIAL AND COMMERCIAL STRUCTURES MAY BE 3 STORIES IN HEIGHT

YACHT CLUB AT SUMMER'S END

CORAL BAY, ST. JOHN, USVI

Prepared for:
The Summer's End Group, LLC
5000 Estate Enighed, Suite 63
St. John, USVI 00830
340.777.9075

SEAL:

PROFESSIONAL ENGINEER
JOSEPH A. MINA
1049E
VIRGIN ISLANDS

Documents prepared by Cairone & Kaupp, Incorporated are instruments of service for use solely with respect to this Project and unless otherwise provided, Cairone & Kaupp, Incorporated shall be deemed the author of these documents and shall retain all common law, statutory and other reserved rights, including the copyright. They are not intended or represented to be suitable for reuse by Owner or others on extension of the Project or on any other project. Any reuse without written verification or adoption by Cairone & Kaupp, Incorporated will be at Owner's sole risk and without liability or legal exposure to Cairone & Kaupp, Incorporated; and Owner shall indemnify and hold harmless Cairone & Kaupp, Incorporated from all claims, damages, losses and expenses including attorney's fees arising out of or resulting therefrom.

Date	No.	Revision	By
06-23-14	1	FINAL CZM SUBMISSION	JAM

ENVIRONMENTAL:
Bioimpact, Inc.
P.O. Box 132 Kingshill
St. Croix, U.S. Virgin Islands 00851
340 690-8445 Fax 340 718-3800
bioimpact.islands.vi@gmail.com

SURVEY:
MARVIN BERNING & ASSOCIATES
LAND SURVEYORS SUBDIVISION PLANNING PROPERTY SURVEYS
6501 Red Hook Plaza, Suite 201,
Saint Thomas,VI 00802-1306
340-775-6557 email: bgrieurvey@gmail.com

TRAFFIC:
HCA Hoover & Keller Associates
TRANSPORTATION AND TRAFFIC ENGINEERING
Medford, New Jersey 08055
(609) 654-6176
A Partner in Community
4950 York Road - Suite 2C
Holicong, Pennsylvania 18928-031
(267) 544-0508

PRIME:
ATM APPLIED TECHNOLOGY & MANAGEMENT
Applied Technology & Management, Inc.
411 Pablo Avenue
Jacksonville Beach, FL 32250
O: 904-249-8000
www.appliedtm.com
Coastal, Environmental, Marine, and Water Resource Engineering

CIVIL:
Cairone & Kaupp, Inc.
Landscape Architecture
Civil Engineering
1118 East Columbia Avenue
Philadelphia, PA 19125 4206
Phone: 215 291 2600
Fax: 215 291 2604
www.caironekaupp.com

Drawing Title:

SITE PLAN

PARCEL NO. 41-REMAINDER

Project No.:	1220
Drawn By:	RMB
Approved By:	JAM
Scale:	1" = 10'
Date:	28MAR14
Drawing No.:	C204
Sheet	7 of 15

P:\2012\1220-usvi marina\Cad\Current\1220C-C201-C206.dwg | Jun 23, 2014 - 1:36pm | JMina | Cairone & Kaupp, Inc.

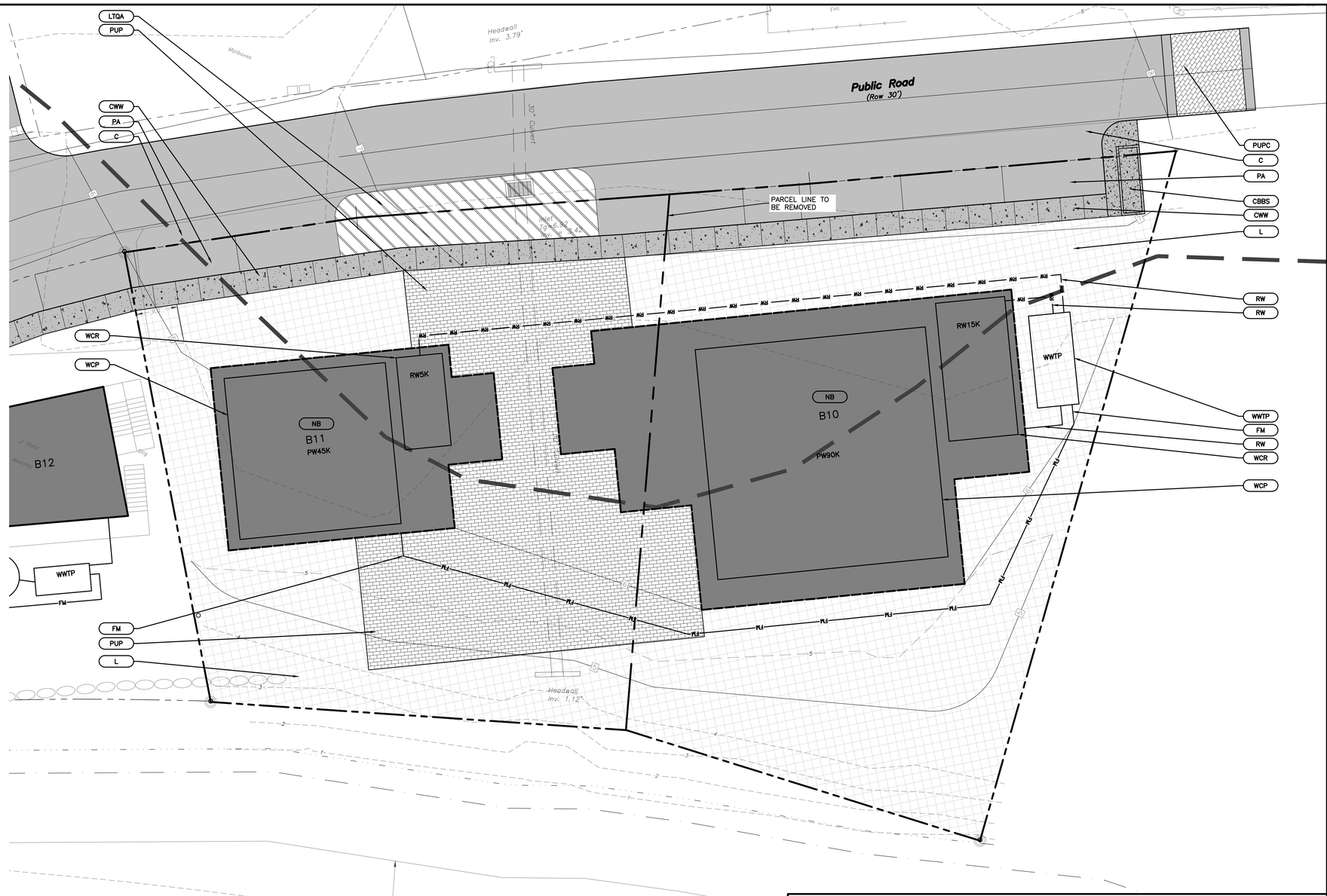

GENERAL NOTES

1. CONTRACTOR SHALL INSPECT AND VERIFY ALL FIELD DIMENSIONS AND SITE CONDITIONS SHOWN HEREIN BEFORE PROCEEDING WITH THE WORK. DISCREPANCIES BETWEEN FIELD CONDITIONS AND THESE PLANS SHALL BE BROUGHT TO THE ENGINEER'S ATTENTION PRIOR TO ANY COMMENCEMENT OF THE WORK. ONCE CONSTRUCTION HAS BEGUN CONTRACTOR SHALL NOT USE FIELD INFORMATION DISCREPANCIES AS THE BASIS FOR CHANGE ORDER CLAIMS.
2. THE LOCATION OF EXISTING UNDERGROUND UTILITIES ARE SHOWN IN AN APPROXIMATE WAY ONLY AND HAVE NOT BEEN INDEPENDENTLY VERIFIED. THE CONTRACTOR SHALL DETERMINE THE EXACT LOCATION OF ALL EXISTING UTILITIES BEFORE COMMENCING WORK, AND AGREES TO BE FULLY RESPONSIBLE FOR ANY AND ALL DAMAGES WHICH MIGHT BE OCCASIONED BY THE CONTRACTORS FAILURE TO EXACTLY LOCATE AND PRESERVE ANY AND ALL UNDERGROUND UTILITIES.

KEY

ADA	PROVIDE ADA PARKING SPACES
C	PROVIDE CONCRETE PAVING
CBBS	PROVIDE CONCRETE BLOCK BUS STOP
CWW	PROVIDE CONCRETE PAVED WALKWAY
L	PROVIDE LANDSCAPE AREA
LTQA	PROVIDE LOADING AND TAXI QUEUING AREA
NB	NEW BUILDING
PA	PROVIDE PARKING
PP	PROVIDE PERMEABLE PAVERS
PUP	PROVIDE PEDESTRIAN UNIT PAVER
PUPC	PROVIDE RAISED PEDESTRIAN UNIT PAVER CROSSWALK
RW	PROVIDE RECYCLED WATER LINE
TEE	PROVIDE TEE FITTING
WCP	PROVIDE POTABLE WATER CISTERN
WCR	PROVIDE RECYCLED WATER CISTERN
WWTP	PROVIDE WASTEWATER TREATMENT PLANT

LEGEND

- Right of Way Line
- Property Line
- Storm Sewer Pipe
- Fence Line
- Contour
- Building Adjacent
- Building
- Roof Overhang
- FEMA 100Yr Floodplain
- Soil Boundry with Soil Types
- +0.00 Spot Elevation
- Inlet — Storm Sewer Inlet
- Headwall — Storm Sewer Headwall
- Manhole
- Dry Stone Retaining Wall
- Signs
- Trees
- Cist. — Existing Cistern
- Curb — Existing Curb
- Conc. Pvg. — Existing Concrete Paving
- Fnc — Existing Fence
- Gncp — Existing Generator on Concrete Pad
- Open Space — Existing Open Space Area
- Ramp — Existing Ramp
- Sptc. — Existing Septic
- Strs — Existing Stairs
- Stlg — Existing Stairs and Landing
- Xfcp — Existing Transformer on Concrete Pad
- BUILDING
- PAVEMENT TO BE REMOVED
- FUTURE BUILDING
- NEW PEDESTRIAN UNIT PAVERS
- NEW LANDSCAPE AREA
- NEW CONCRETE PAVING
- NEW CONCRETE SIDEWALK
- NEW PERMEABLE PAVERS
- NEW PERMANENT TURF REINFORCEMENT MATTING
- NEW ROCK STABILIZATION BLANKET
- 0 — NEW CONTOUR
- +0.00 — NEW SPOT GRADE
- 0 — PARKING SPACES
- MH — NEW MANHOLE
- OTS — NEW OUTLET STRUCTURE
- SD — NEW SEDIMENT TRAP
- ST — NEW STORM LINE
- S — NEW SANITARY LINE
- FM — NEW SANITARY FORCE MAIN
- W — NEW WATER LINE
- RW — NEW RECYCLED WATER LINE
- E — NEW UNDERGROUND ELECTRIC LINE
- NEW UNDERGROUND STORM WATER MANAGEMENT AREA
- NEW VERTICAL STONE INTERCEPTOR DRAIN
- NEW TRENCH DRAIN
- NEW END WALL

GRAPHIC SCALE

0 5 10 20 40

ZONING SCHEDULE PARCEL 17 - 0.286 Ac.
W-1 WATERFRONT PLEASURE DISTRICT

DESCRIPTON	PERMITTED	EXISTING
LOT AREA (MIN)	10,000 SF	12,458 SF
LOT OCCUPANCY (MAX)	40%	0 SF; 0%
LOT OPEN SPACE (MIN)	30%	12,458 SF; 100%
LOT DENSITY (MAX)	2 UNITS	N/A
LOT WIDTH (MIN)	100 FT	109.9 FT
FRONT YARD SETBACK (MIN)	25 FT	N/A
SIDE YARD SETBACK (MIN)	10 FT	N/A
REAR YARD SETBACK (MIN)	20 FT	N/A

BUILDING HEIGHT SCHEDULE

ID	EXISTING HEIGHT	PROPOSED HEIGHT	PERMITTED HEIGHT
B10	N/A	3 STORY	3 STORIES

ZONING SCHEDULE PARCEL 18 - 0.257 Ac.
W-1 WATERFRONT PLEASURE DISTRICT

DESCRIPTON	PERMITTED	EXISTING
LOT AREA (MIN)	10,000 SF	11,195 SF
LOT OCCUPANCY (MAX)	40%	0 SF; 0%
LOT OPEN SPACE (MIN)	30%	11,195 SF; 100%
LOT DENSITY (MAX)	2 UNITS	N/A
LOT WIDTH (MIN)	100 FT	118.6 FT
FRONT YARD SETBACK (MIN)	25 FT	N/A
SIDE YARD SETBACK (MIN)	10 FT	N/A
REAR YARD SETBACK (MIN)	20 FT	N/A

BUILDING HEIGHT SCHEDULE

ID	EXISTING HEIGHT	PROPOSED HEIGHT	PERMITTED HEIGHT
B11	N/A	3 STORY	3 STORIES

ZONING SCHEDULE PARCEL 17 AND 18 (COMBINED) - 0.543 Ac.
W-1 WATERFRONT PLEASURE DISTRICT

DESCRIPTON	PERMITTED	PROPOSED
LOT AREA (MIN)	10,000 SF	23,653 SF
LOT OCCUPANCY (MAX)	40%	7,2410 SF; 31%
LOT OPEN SPACE (MIN)	30%	16,413 SF; 69%
LOT DENSITY (MAX)	2 UNITS	6 UNITS
LOT WIDTH (MIN)	100 FT	228.5 FT
FRONT YARD SETBACK (MIN)	25 FT	26.9 FT
SIDE YARD SETBACK (MIN)	10 FT	10 FT
REAR YARD SETBACK (MIN)	20 FT	29.5 FT

YACHT CLUB AT SUMMER'S END

CORAL BAY, ST. JOHN, USVI

Prepared for:

The Summer's End Group, LLC
5000 Estate Enighed, Suite 63
St. John, USVI 00830
340.777.9075

SEAL:

PROFESSIONAL ENGINEER
JOSEPH A. MINA
1049E
VIRGIN ISLANDS

Documents prepared by Cairone & Kaupp, Incorporated are instruments of service for use solely with respect to this Project and unless otherwise provided, Cairone & Kaupp, Incorporated shall be deemed the author of these documents and shall retain all common law, statutory and other reserved rights, including the copyright. They are not intended or represented to be suitable for reuse by Owner or others on extension of the Project or on any other project. Any reuse without written verification or adoption by Cairone & Kaupp, Incorporated will be at Owner's sole risk and without liability or legal exposure to Cairone & Kaupp, Incorporated; and Owner shall indemnify and hold harmless Cairone & Kaupp, Incorporated from all claims, damages, losses and expenses including attorney's fees arising out of or resulting therefrom.

Date	No.	Revision	By
06-23-14	1	FINAL CZM SUBMISSION	JAM

ENVIRONMENTAL:

Bioimpact, Inc.
P.O. Box 132 Kingshill
St. Croix, U.S. Virgin Islands 00851
340 690-8445 Fax 340 718-3800
bioimpact.islands.vi@gmail.com

SURVEY:

MARVIN BERNING & ASSOCIATES
LAND SURVEYORS SUBDIVISION PLANNING PROPERTY SURVEYS
6501 Red Hook Plaza, Suite 201,
Saint Thomas,VI 00802-1306
340-775-6557 email: bgvisurvey@gmail.com

TRAFFIC:

HCA Hunter & Center Associates
A Professional Corporation
TRANSPORTATION AND TRAFFIC ENGINEERING
Medford, New Jersey 08055 (609) 654-1894
4950 York Road - Suite 2C
Hollcong, Pennsylvania 18928-031
(267) 544-0508

PRIME:

ATM APPLIED TECHNOLOGY & MANAGEMENT
Applied Technology & Management, Inc.
411 Pablo Avenue
Jacksonville Beach, FL 32250
O: 904-249-8000
www.appliedtm.com
Coastal, Environmental, Marine, and Water Resource Engineering

CIVIL:

Cairone & Kaupp, Inc.
Landscape Architecture
Civil Engineering
1118 East Columbia Avenue
Philadelphia, PA 19125 4206
Phone: 215 291 2800
Fax: 215 291 2804
www.caironekaupp.com

Drawing Title:

SITE PLAN

PARCEL NO. 10-17
PARCEL NO. 10-18

Project No.:	1220
Drawn By:	RMB
Approved By:	JAM
Scale:	
Date:	28MAR14
Drawing No.:	C205
Sheet	8 of 15

P:\2012\1220-usvi marina\Cad\Current\1220C-C201-C206.dwg | Jun 23, 2014 - 1:36pm | JMina | Cairone & Kaupp, Inc.

GENERAL NOTES

1. CONTRACTOR SHALL INSPECT AND VERIFY ALL FIELD DIMENSIONS AND SITE CONDITIONS SHOWN HEREIN BEFORE PROCEEDING WITH THE WORK. DISCREPANCIES BETWEEN FIELD CONDITIONS AND THESE PLANS SHALL BE BROUGHT TO THE ENGINEER'S ATTENTION PRIOR TO ANY COMMENCEMENT OF THE WORK. ONCE CONSTRUCTION HAS BEGUN CONTRACTOR SHALL NOT USE FIELD INFORMATION DISCREPANCIES AS THE BASIS FOR CHANGE ORDER CLAIMS.
2. THE LOCATION OF EXISTING UNDERGROUND UTILITIES ARE SHOWN IN AN APPROXIMATE WAY ONLY AND HAVE NOT BEEN INDEPENDENTLY VERIFIED. THE CONTRACTOR SHALL DETERMINE THE EXACT LOCATION OF ALL EXISTING UTILITIES BEFORE COMMENCING WORK, AND AGREES TO BE FULLY RESPONSIBLE FOR ANY AND ALL DAMAGES WHICH MIGHT BE OCCASIONED BY THE CONTRACTORS FAILURE TO EXACTLY LOCATE AND PRESERVE ANY AND ALL UNDERGROUND UTILITIES.

KEY

ADA	PROVIDE ADA PARKING SPACES
C	PROVIDE CONCRETE PAVING
CWW	PROVIDE CONCRETE PAVED WALKWAY
DWBS	PROVIDE DOMESTIC WATER BUILDING SERVICE
EB	*Existing Building To Remain*
L	PROVIDE LANDSCAPE AREA
LTQA	PROVIDE LOADING AND TAXI QUEUING AREA
NB	NEW BUILDING
PA	PROVIDE PARKING
PP	PROVIDE PERMEABLE PAVERS
PUP	PROVIDE PEDESTRIAN UNIT PAVER
PUPC	PROVIDE RAISED PEDESTRIAN UNIT PAVER CROSSWALK
RW	PROVIDE RECYCLED WATER LINE
TEE	PROVIDE TEE FITTING
W	PROVIDE WATER MAIN
WCP	PROVIDE POTABLE WATER CISTERN
WCR	PROVIDE RECYCLED WATER CISTERN
WWTP	PROVIDE WASTEWATER TREATMENT PLANT
WV	PROVIDE WATER VALVE
90E	PROVIDE 90° BEND
45E	PROVIDE 45° BEND
22.5E	PROVIDE 22.5° BEND
11.25E	PROVIDE 11.25° BEND

LEGEND

Right of Way Line
Property Line
Storm Sewer Pipe
Fence Line
Contour
Building Adjacent
Building
Roof Overhang
FEMA 100Yr Floodplain
Soil Boundry with Soil Types
Spot Elevation
Storm Sewer Inlet
Storm Sewer Headwall
Manhole
Dry Stone Retaining Wall
Signs
Trees
Existing Cistern
Existing Curb
Existing Concrete Paving
Existing Fence
Existing Generator on Concrete Pad
Existing Open Space Area
Existing Ramp
Existing Septic
Existing Stairs
Existing Stairs and Landing
Existing Transformer on Concrete Pad
BUILDING
PAVEMENT TO BE REMOVED
FUTURE BUILDING
NEW PEDESTRIAN UNIT PAVERS
NEW LANDSCAPE AREA
NEW CONCRETE PAVING
NEW CONCRETE SIDEWALK
NEW PERMEABLE PAVERS
NEW PERMANENT TURF REINFORCEMENT MATTING
NEW ROCK STABILIZATION BLANKET
NEW CONTOUR
NEW SPOT GRADE
PARKING SPACES
NEW MANHOLE
NEW OUTLET STRUCTURE
NEW SEDIMENT TRAP
NEW STORM LINE
NEW SANITARY LINE
NEW SANITARY FORCE MAIN
NEW WATER LINE
NEW RECYCLED WATER LINE
NEW UNDERGROUND ELECTRIC LINE
NEW UNDERGROUND STORM WATER MANAGEMENT AREA
NEW VERTICAL STONE INTERCEPTOR DRAIN
NEW TRENCH DRAIN
NEW END WALL

GRAPHIC SCALE
0 5 10 20 40

ZONING SCHEDULE PARCEL 19 - 0.239 Ac.
W-1 WATERFRONT PLEASURE DISTRICT

DESCRIPTION	PERMITTED	EXISTING	PROPOSED
LOT AREA (MIN)	10,000 SF	10,410 SF	10,410 SF
LOT OCCUPANCY (MAX)	40%	2,240 SF; 22%	2,240 SF; 22%
LOT OPEN SPACE (MIN)	30%	7,460 SF; 72%	7,460 SF; 72%
LOT DENSITY (MAX)	2 UNITS	N/A	2 UNITS
LOT WIDTH (MIN)	100 FT	291 FT	291 FT
FRONT YARD SETBACK (MIN)	25 FT	17.9 FT	17.9 FT
SIDE YARD SETBACK (MIN)	10 FT	9.2 FT	9.2 FT
REAR YARD SETBACK (MIN)	20 FT	19.9 FT	19.9 FT

BUILDING HEIGHT SCHEDULE

ID	EXISTING HEIGHT	PROPOSED HEIGHT	PERMITTED HEIGHT
B12	2 STORIES	2 STORIES	3 STORIES
B13	1 STORY	1 STORY	3 STORIES

YACHT CLUB AT SUMMER'S END

CORAL BAY, ST. JOHN, USVI

Prepared for:

The Summer's End Group, LLC
5000 Estate Enighed, Suite 63
St. John, USVI 00830
340.777.9075

SEAL:

PROFESSIONAL ENGINEER
JOSEPH A. MINA
1049E
VIRGIN ISLANDS

Documents prepared by Cairone & Kaupp, Incorporated are instruments of service for use solely with respect to this Project and unless otherwise provided, Cairone & Kaupp, Incorporated shall be deemed the author of these documents and shall retain all common law, statutory and other reserved rights, including the copyright. They are not intended or represented to be suitable for reuse by Owner or others on extension of the Project or on any other project. Any reuse without written verification or adoption by Cairone & Kaupp, Incorporated will be at Owner's sole risk and without liability or legal exposure to Cairone & Kaupp, Incorporated; and Owner shall indemnify and hold harmless Cairone & Kaupp, Incorporated from all claims, damages, losses and expenses including attorney's fees arising out of or resulting therefrom.

Date	No.	Revision	By
06-23-14	1	FINAL CZM SUBMISSION	JAM

ENVIRONMENTAL:
Bioimpact, Inc.
P.O. Box 132 Kingshill
St. Croix, U.S. Virgin Islands 00851
340 690-8445 Fax 340 718-3800
bioimpact.islands.vi@gmail.com

SURVEY:
MARVIN BERNING & ASSOCIATES
LAND SURVEYORS SUBDIVISION PLANNING PROPERTY SURVEYS
6501 Red Hook Plaza, Suite 201,
Saint Thomas,VI 00802-1306
340-775-6557 email: bgrinsurvey@gmail.com

TRAFFIC:
HCA Hanover & Center Associates
A PROFESSIONAL CORPORATION
TRANSPORTATION AND TRAFFIC ENGINEERING
Medford, New Jersey 08055
(609) 654-1878
4950 York Road - Suite 2C
Holicong, Pennsylvania 18928-031
(267) 544-0508

PRIME:
ATM APPLIED TECHNOLOGY & MANAGEMENT
Applied Technology & Management, Inc.
411 Pablo Avenue
Jacksonville Beach, FL 32250
O: 904-249-8000
www.appliedtm.com
Coastal, Environmental, Marine, and Water Resource Engineering

CIVIL:
Cairone & Kaupp, Inc.
Landscape Architecture
Civil Engineering
1118 East Columbia Avenue
Philadelphia, PA 19125 4206
Phone: 215 291 2800
Fax: 215 291 2804
www.caironekaupp.com

Drawing Title:

SITE PLAN
PARCEL NO. 10-19

Project No.: 1220	Drawing No.: C206
Drawn By: RMB	
Approved By: JAM	
Scale:	
Date: 28MAR14	Sheet 9 of 15

P:\2012\1220-usvi marina\Cad\Current\1220C-C201-C206.dwg | Jun 23, 2014 - 1:36pm | JMina | Cairone & Kaupp, Inc.

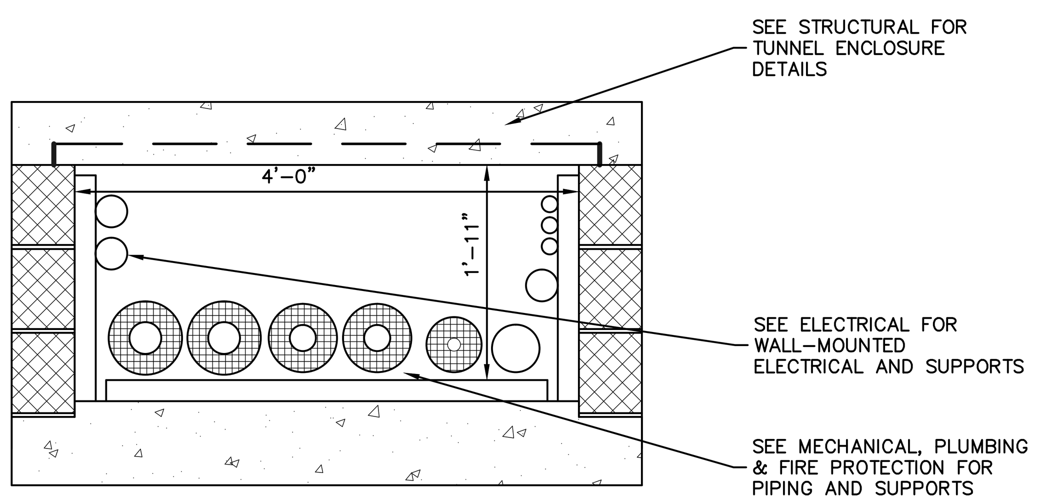

6 / C210 **UTILITY TUNNEL SECTION**
NOT TO SCALE

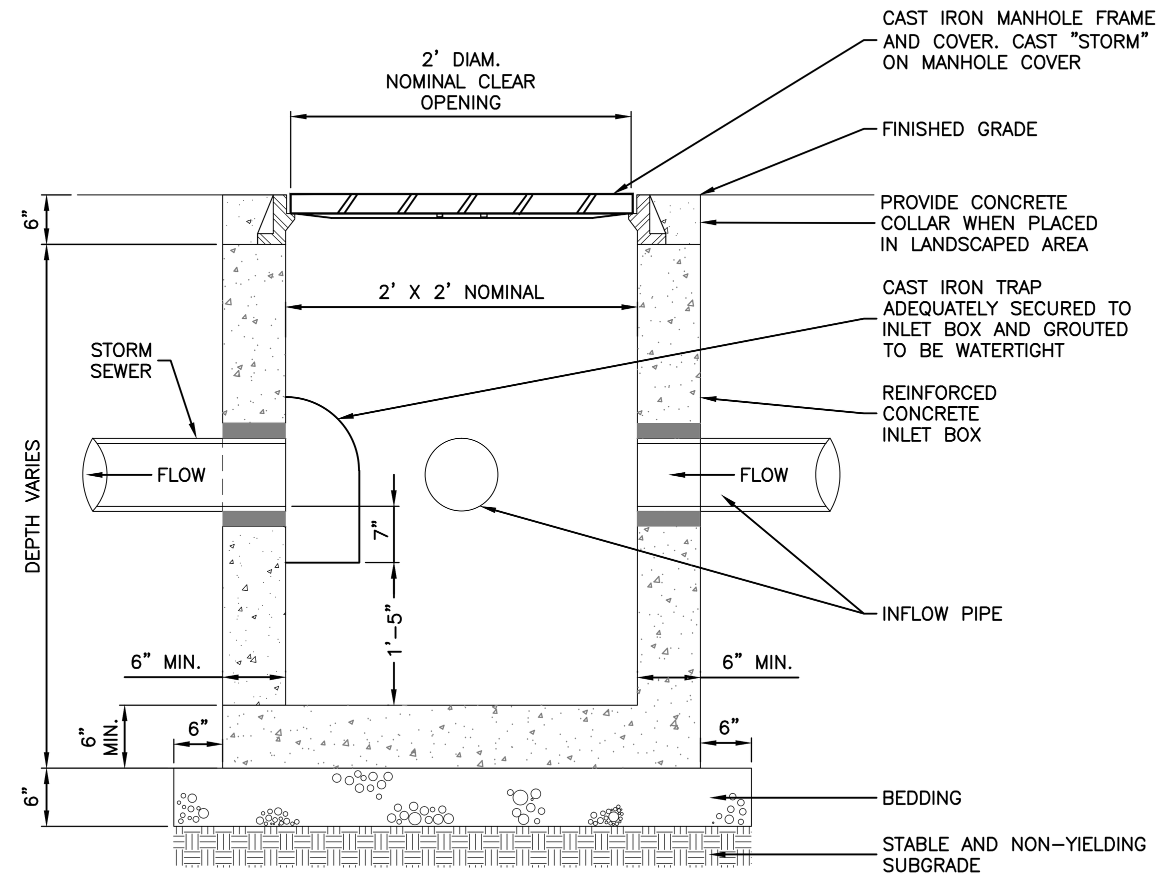

NOTES:
1. TRAP TO BE ADEQUATELY SECURED TO INLET BOX AND GROUTED TO BE WATERTIGHT.

4 / C210 **SEDIMENT TRAP**
NOT TO SCALE

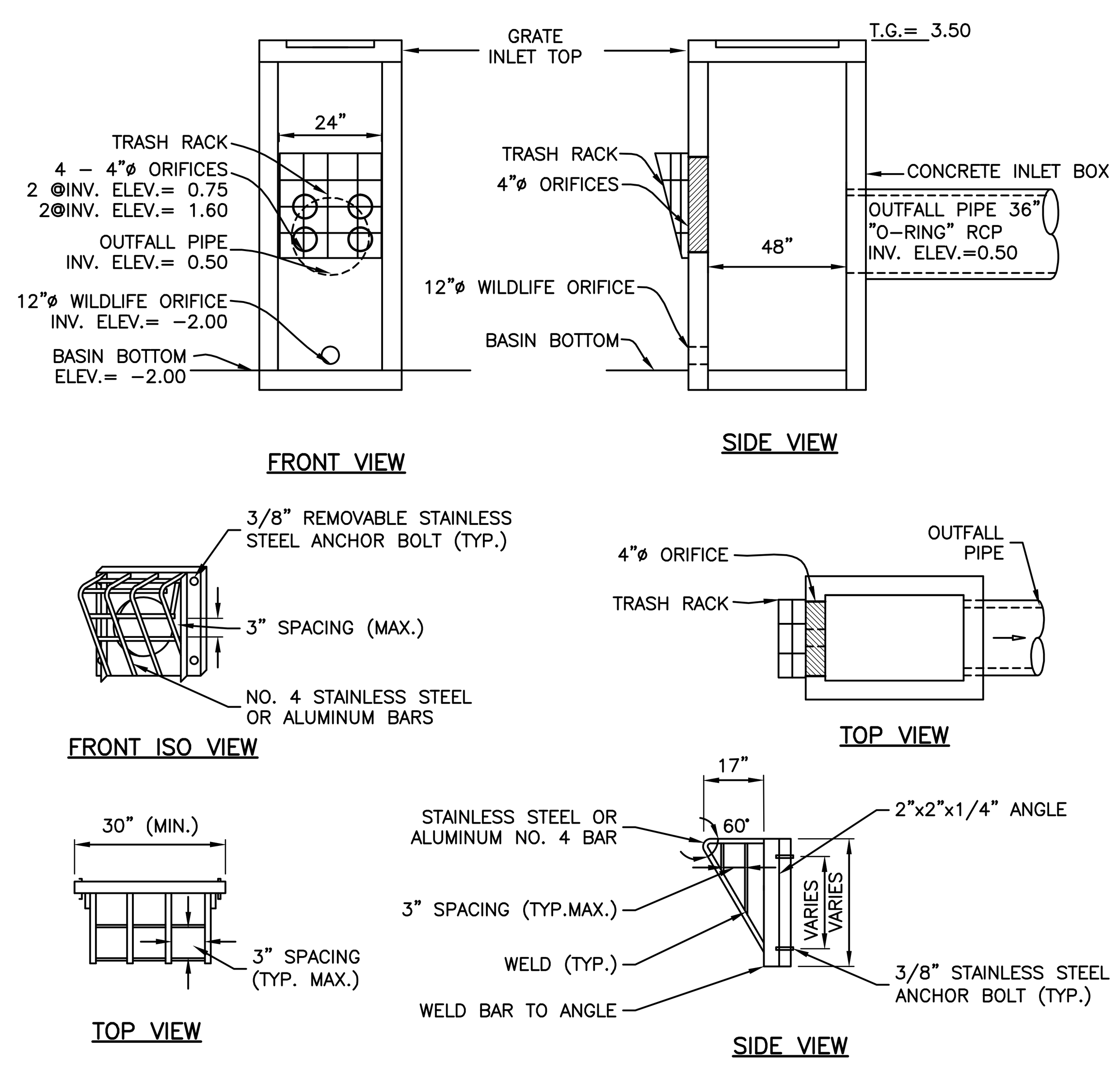

7 / C410 **OUTLET STRUCTURE W/ TRASH RACK**
NOT TO SCALE

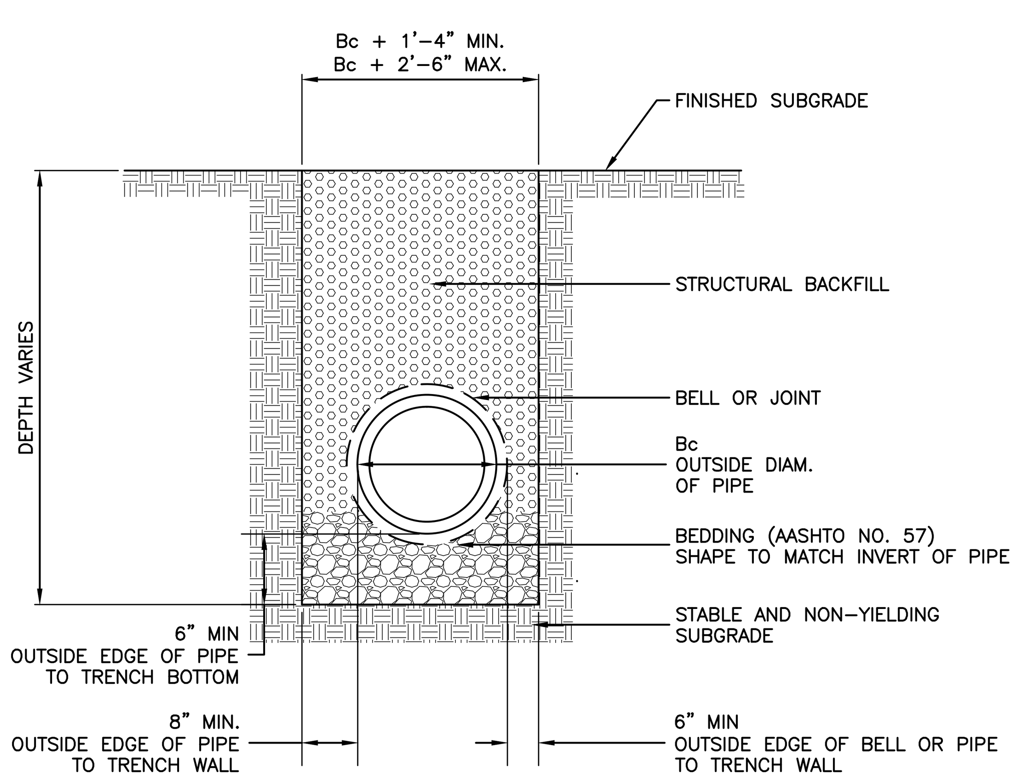

5 / C210 **PIPE TRENCH/BEDDING**
NOT TO SCALE

MAINTENANCE PORT

THIS PORT IS USED TO PUMP WATER INTO THE SYSTEM AND RE-SUSPEND ACCUMULATED SEDIMENT SO THAT IT MAY BE PUMPED OUT. MINIMUM REQUIRED MAINTENANCE INCLUDES A QUARTERLY INSPECTION DURING THE FIRST YEAR OF OPERATION AND A YEARLY INSPECTION THEREAFTER. FLUSH AS NEEDED.

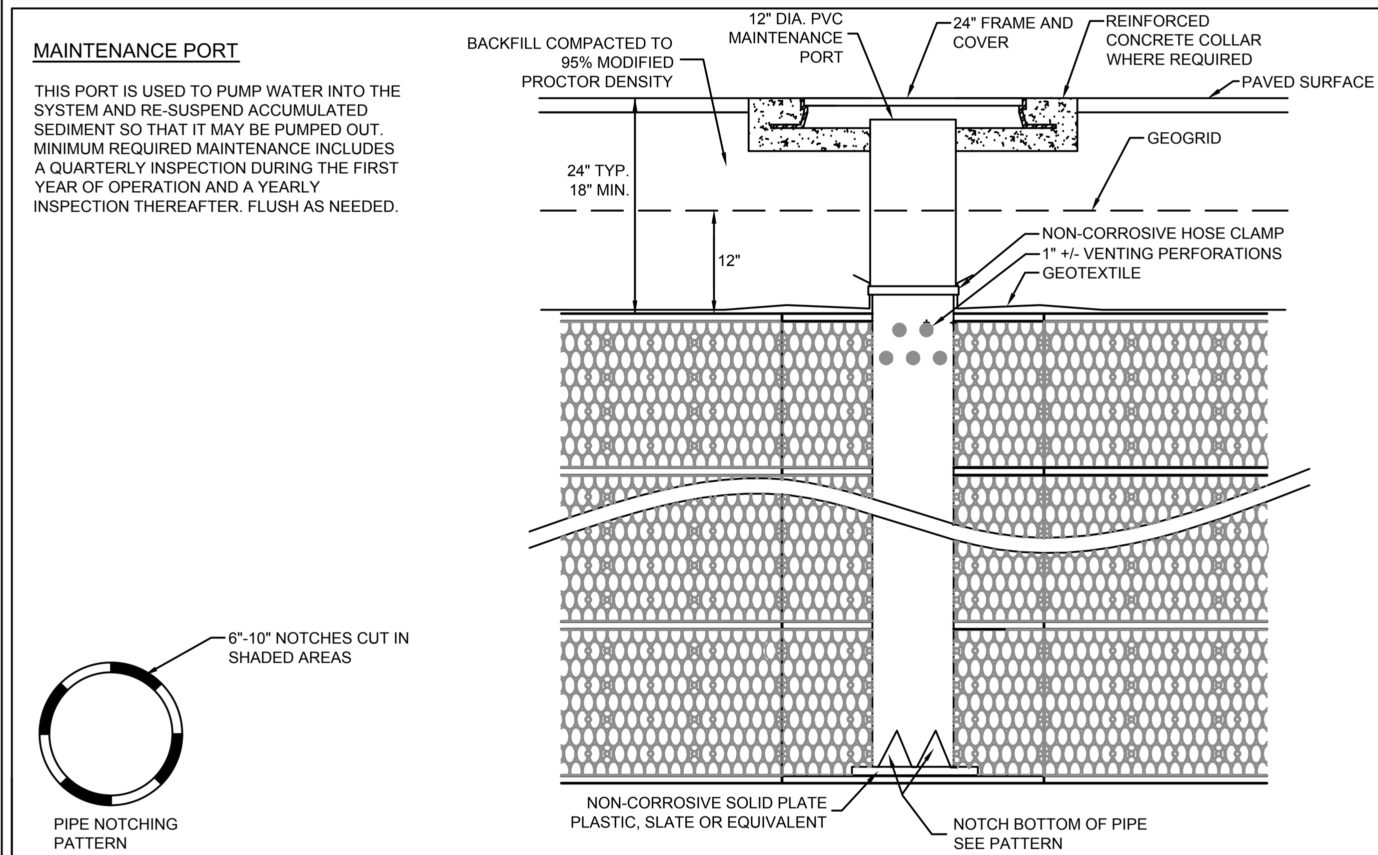

R-TANK™ TYPICAL MAINTENANCE PORT

FOR ADDITIONAL INFORMATION PLEASE CONTACT: ACF ENVIRONMENTAL, 1-800-448-3636, www.acfenvironmental.com

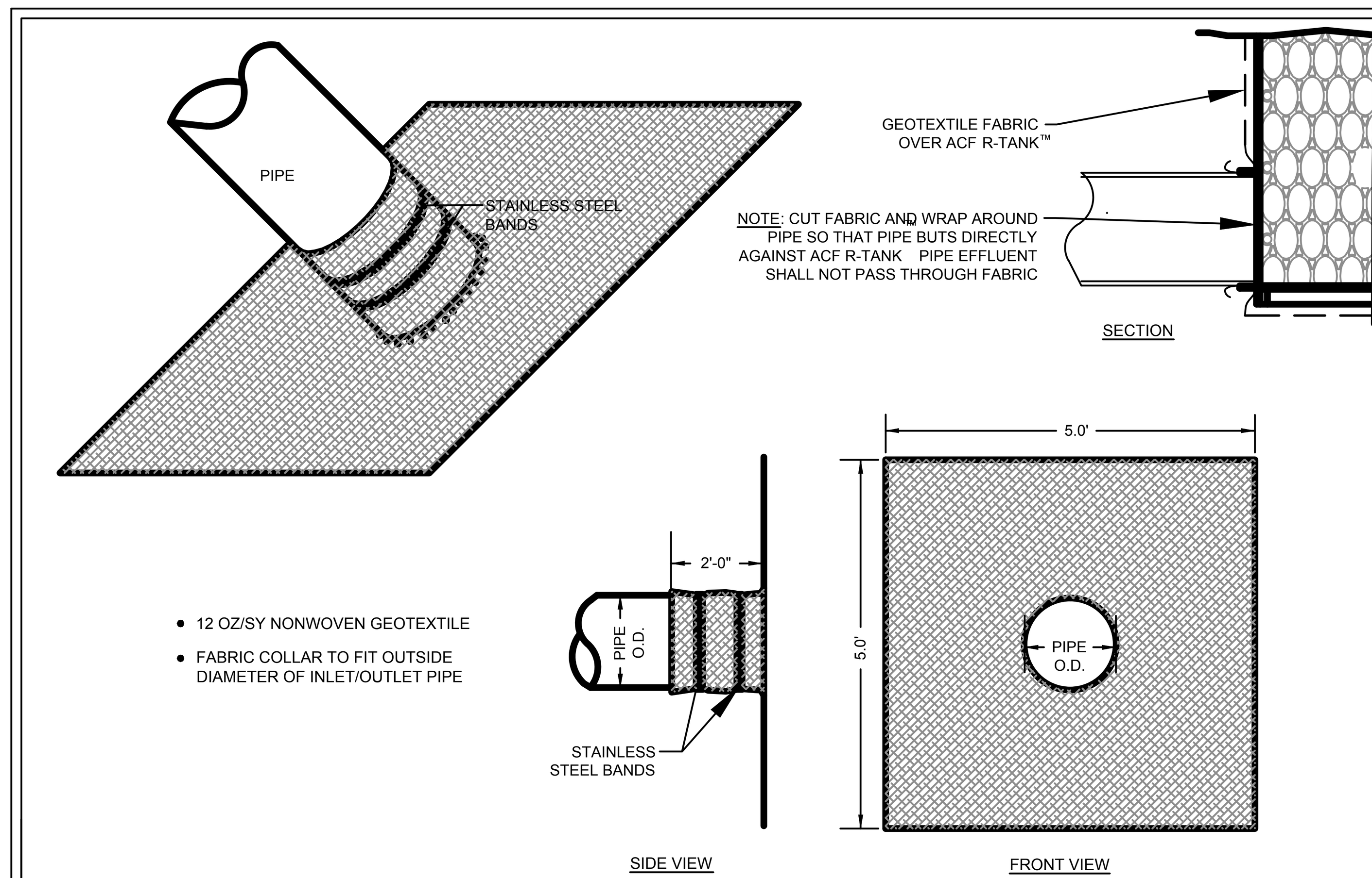

- 12 OZ/SY NONWOVEN GEOTEXTILE
- FABRIC COLLAR TO FIT OUTSIDE DIAMETER OF INLET/OUTLET PIPE

FABRIC PIPE BOOT FOR R-TANK ™

FOR ADDITIONAL INFORMATION PLEASE CONTACT: ACF ENVIRONMENTAL, 1-800-448-3636, www.acfenvironmental.com

END VIEW OF PIPE/FABRIC CONNECTION. CUT AN "X" IN THE FABRIC SLIGHTLY LARGER THAN PIPE, PULL THE FABRIC AROUND THE PIPE TO CREATE THE "BOOT" AND THEN SECURE WITH A HOSE-CLAMP.

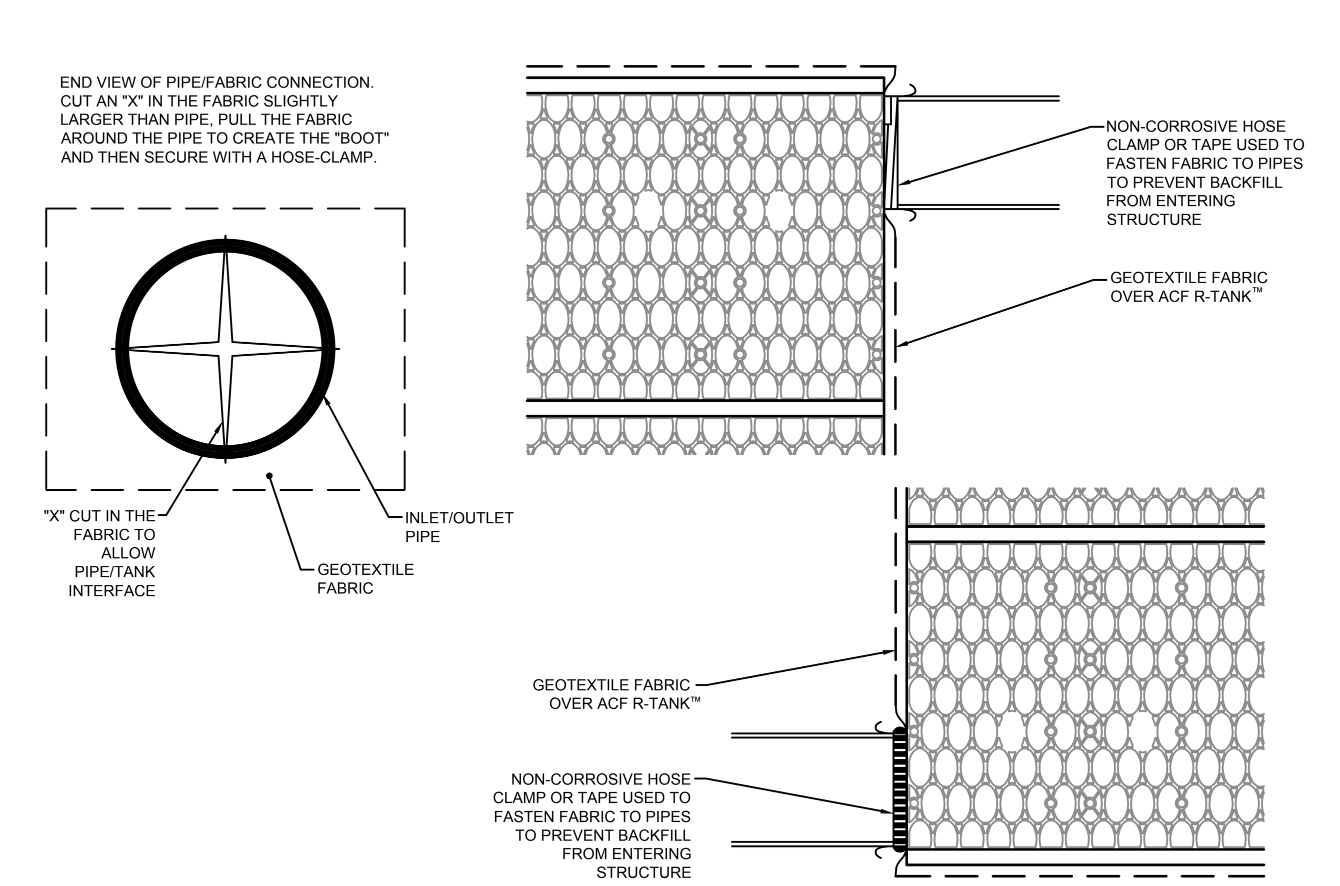

R-TANK™ TYPICAL TANK INLET/OUTLET DETAIL

FOR ADDITIONAL INFORMATION PLEASE CONTACT: ACF ENVIRONMENTAL, 1-800-448-3636, www.acfenvironmental.com

TOP BACKFILL: 18" MIN. STRUCTURAL FILL (24" RECOMMENDED, SIMILAR TO SIDE BACKFILL). MATERIAL ABOVE THE GEOGRID MAY VARY BASED ON INTENDED USE, BUT IN NO CASE SHOULD THE CLAY CONTENT EXCEED 10%. A MIN. 12" COVER MUST BE MAINTAINED BETWEEN BACKFILL EQUIPMENT AND THE TOP OF THE R-TANK™ SYSTEM AT ALL TIMES. FOR BEST RESULTS, PUSH OUT 14" TO MAINTAIN A MIN. 12" COVER. REFER TO THE R-TANK™ INSTALLATION GUIDE FOR LISTING OF ACCEPTABLE EQUIPMENT . TOTAL HEIGHT OF TOP BACKFILL SHOULD NOT EXCEED 7'.CONTACT ACF ENVIRONMENTAL IF MORE THAN 7' OR LESS THAN 24" OF TOP BACKFILL IS REQUIRED (FROM TOP OF TANK TO TOP OF PAVEMENT).

NOTES:
- FOR COMPLETE MODULE DATA, SEE APPROPRIATE R-TANK™ SHEET (SINGLE MODULE, DOUBLE MODULE, TRIPLE MODULE, QUAD MODEL, OR PENTA MODEL)
- INSTALLATIONS PER THIS DETAIL MEET GUIDELINES OF H20 LOADING PER THE 1983, 13TH EDITION OF THE AMERICAN ASSOCIATION OF STATE, HIGHWAY AND TRAFFIC OFFICIALS (AASHTO) STANDARD SPECIFICATIONS
- PRE-TREATMENT STRUCTURES NOT SHOWN

GEOGRID (TENSAR BX-1200 OR EQUAL) PLACED 12" ABOVE THE R-TANK™ SYSTEM. OVERLAP ADJACENT PANELS BY 18" MIN. GEOGRID SHOULD EXTEND 3' BEYOND THE EXCAVATION FOOTPRINT.

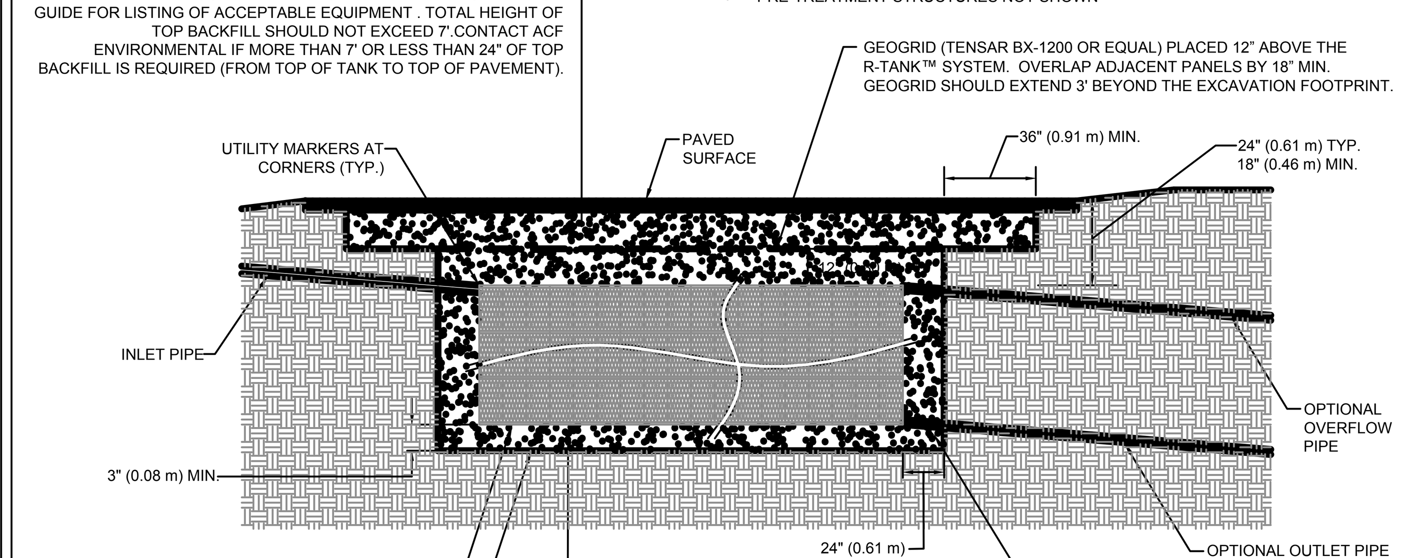

R-TANK™ UNITS WRAPPED IN 8 OZ. NONWOVEN GEOTEXTILE (OR EQUAL) LOAD RATING: 32 PSI (MODULE ONLY)

EXCAVATION LINE (AND IMPERMEABLE LINER IF REQUIRED)

BASE: 3" MIN. SUITABLE STRUCTURAL BACKFILL COMPACTED TO 95% STANDARD PROCTOR DENSITY IS REQUIRED TO PROVIDE A LEVEL BASE SURFACE. MUST BE SMOOTH, FREE OF LUMPS OR DEBRIS, AND EXTEND 2' BEYOND R-TANK™ FOOTPRINT. A CBR GREATER THAN 5 MUST BE ACHIEVED PRIOR TO INSTALLING ANY R-TANK™. SAND MAY BE ACCEPTABLE, BUT IN NO CASE SHALL CLAY BE USED.

SIDE BACKFILL: 24" MIN., STONE, SAND OR STRUCTURAL FILL LESS THAN 1.5" DIAMETER AND COMPACTABLE TO 95% WITH LESS THAN 10% FINES. MUST BE FREE FROM LUMPS, DEBRIS AND OTHER SHARP OBJECTS. SPREAD EVENLY TO PREVENT R-TANK™ MOVEMENT. COMPACT SIDE BACKFILL WITH POWERED MECHANICAL COMPACTOR IN 12" LIFTS.

R-TANK™ - H20 LOADS

FOR ADDITIONAL INFORMATION PLEASE CONTACT: ACF ENVIRONMENTAL, 1-800-448-3636, www.acfenvironmental.com

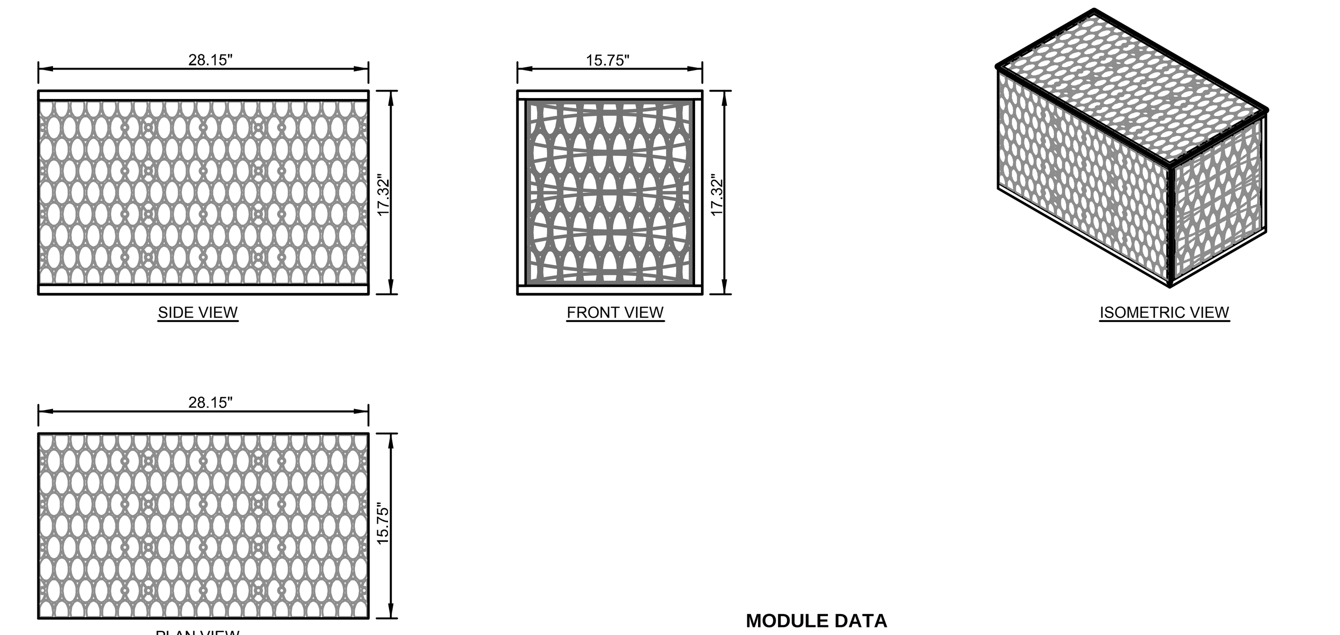

MODULE DATA

GEOMETRY:	LENGTH = 28.15 IN. (715 MM) WIDTH = 15.75 IN. (400 MM) HEIGHT = 17.32 IN. (440 MM) STORAGE VOLUME = 4.22 CF (119 L) VOID INTERNAL VOLUME: 95% VOID SURFACE AREA: 90%	**LOAD RATING**: **MATERIAL**:	40 PSI, (MODULE ONLY) HS25, (WITH ACF COVER SYSTEM) 85% RECYCLED POLYPROPYLENE

R-TANK^{HD} - SINGLE MODULE ™

FOR ADDITIONAL INFORMATION PLEASE CONTACT: ACF ENVIRONMENTAL, 1-800-448-3636, www.acfenvironmental.com

YACHT CLUB AT SUMMER'S END
CORAL BAY, ST. JOHN, USVI
Prepared for:
The Summer's End Group, LLC
5000 Estate Enighed, Suite 63
St. John, USVI 00830
340.777.9075

SEAL:

Documents prepared by Cairone & Kaupp, Incorporated are instruments of service for use solely with respect to this Project and unless otherwise provided, Cairone & Kaupp, Incorporated shall be deemed the author of these documents and shall retain all common law, statutory and other reserved rights, including the copyright. They are not intended or represented to be suitable for reuse by Owner or others on extension of the Project or on any other project. Any reuse without written verification or adoption by Cairone & Kaupp, Incorporated will be at Owner's sole risk and without liability or legal exposure to Cairone & Kaupp, Incorporated; and Owner shall indemnify and hold harmless Cairone & Kaupp, Incorporated from all claims, damages, losses and expenses including attorney's fees arising out of or resulting therefrom.

Date	No.	Revision	By
06–23–14	1	FINAL CZM SUBMISSION	JAM

ENVIRONMENTAL:
Bioimpact, Inc.
P.O. Box 132 Kingshill
St. Croix, U.S. Virgin Islands 00851
340 690–8445 Fax 340 718–3800
bioimpact.islands.vi@gmail.com

SURVEY:
MARVIN BERNING & ASSOCIATES
LAND SURVEYORS SUBDIVISION PLANNING PROPERTY SURVEYS
6501 Red Hook Plaza, Suite 201,
Saint Thomas,VI 00802–1306
340–775–6557 email: hgvisurvey@gmail.com

TRAFFIC:
HCA Homer & Canter Associates A Professional Corporation
TRANSPORTATION AND TRAFFIC ENGINEERING
105 Atsion Road – Suite F
Medford, New Jersey 08055
(609) 654–4104
4950 York Road – Suite 2C
Holicong, Pennsylvania 18928–031
(267) 544–0508

PRIME:
ATM APPLIED TECHNOLOGY & MANAGEMENT
Applied Technology & Management, Inc.
411 Pablo Avenue
Jacksonville Beach, FL 32250
O: 904–249–8009
www.appliedtm.com
Coastal, Environmental, Marine, and Water Resource Engineering

CIVIL:
Cairone & Kaupp, Inc.
Landscape Architecture
Civil Engineering
1118 East Columbia Avenue
Philadelphia, PA 19125 4206
Phone: 215 291 2800
Fax: 215 291 2804
www.caironekaupp.com

Drawing Title:
SITE PLAN DETAILS

Project No.:	1220	Drawing No.:	C210
Drawn By:	RMB		
Approved By:	JAM		
Scale:			
Date:	28MAR14	Sheet	10 of 15

P:\2012\1220–usvi marina\Cad\Current\1220C–C210.dwg | Jun 23, 2014 – 1:36pm | JMina | Cairone & Kaupp, Inc.

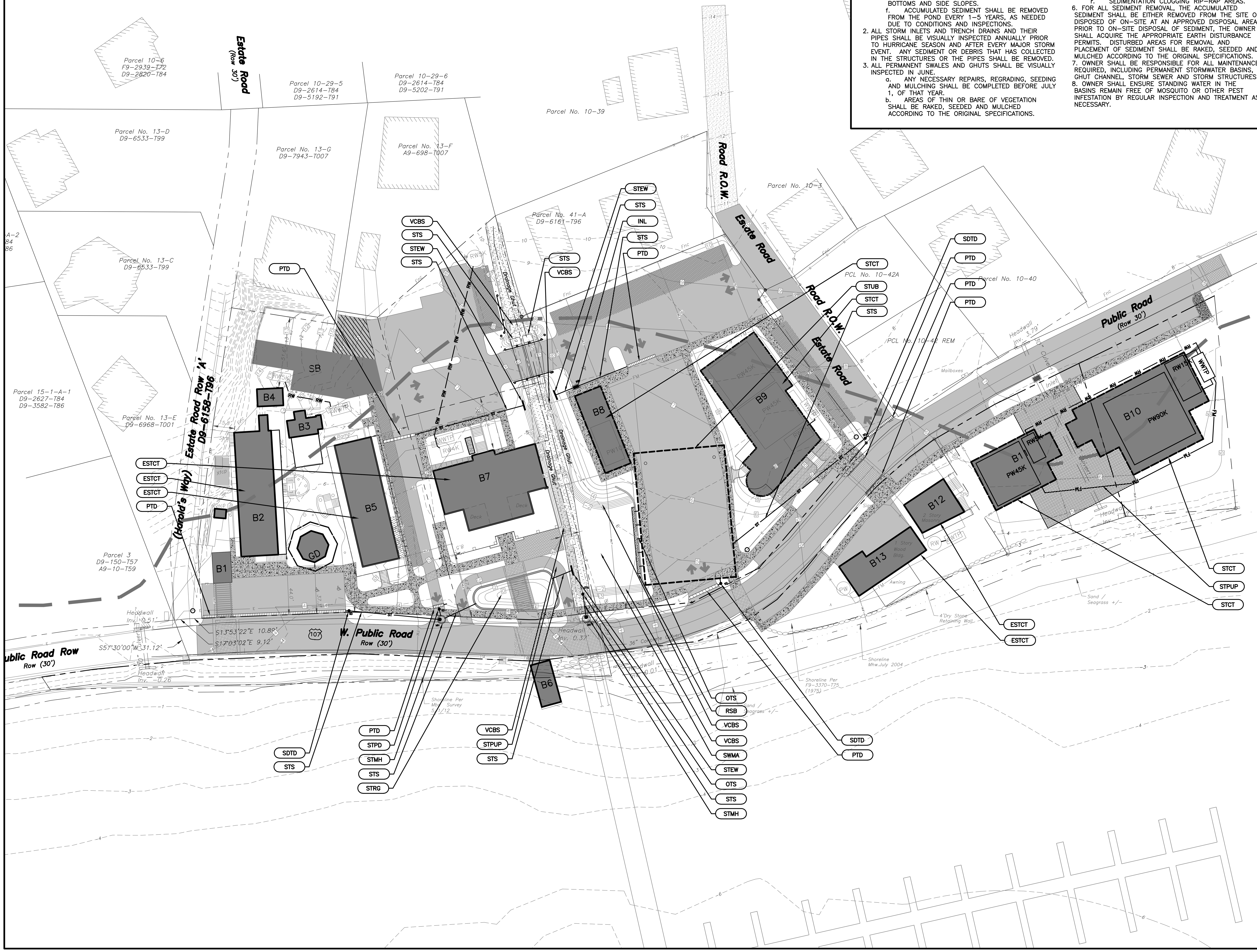

MAINTENANCE NOTES

THE FOLLOWING IS A LIST OF THE RECOMMENDED GUIDELINES TO USE FOR MAINTAINING STORMWATER MANAGEMENT AND CONVEYANCE FACILITIES. THESE GUIDELINES ARE TO BE USED AS RECOMMENDATIONS, AND ARE NOT INTENDED TO BE A FULL AND COMPLETE SET OF REQUIREMENTS AND CIRCUMSTANCES THAT MAY AFFECT THE FUNCTIONING OF THE FACILITIES. CARE, DILIGENCE, AND COMMON SENSE SHOULD BE USED WHEN MAINTAINING THESE FACILITIES. ANY PROBLEMS OR DEFICIENCIES FOUND SHOULD BE ADDRESSED IMMEDIATELY, AND PROPER PROFESSIONAL ASSISTANCE MAY BE REQUIRED, AND SHOULD BE SOUGHT WHEN NEEDED TO ENSURE THAT THE FACILITIES REMAIN IN A CONDITION FOR OPTIMAL PERFORMANCE.

1. THE STORM WATER DETENTION BASIN AND THEIR OUTLET STRUCTURES AND PIPES SHALL BE VISUALLY INSPECTED ANNUALLY PRIOR TO HURRICANE SEASON AND AFTER EVERY MAJOR STORM EVENT.
   a. AREAS OF THIN OR BARE OF VEGETATION SHALL BE RAKED, SEEDED AND MULCHED ACCORDING TO THE ORIGINAL SPECIFICATIONS.
   b. REPAIRS TO THE PERMANENT EROSION CONTROL BLANKET SHALL BE PERFORMED IF NEEDED.
   c. THE WEIR STRUCTURE AND OUTLET PIPES MUST BE KEPT FREE OF DEBRIS, AND SHALL BE CLEARED OF DEBRIS AND LITTER.
   d. THE POND SHALL BE KEPT CLEAR OF FLOATING DEBRIS WHICH MAY CLOG THE OUTLET STRUCTURE.
   e. LAWN AND VEGETATED AREAS SHALL BE KEPT MOWED AND PROPERLY GROOMED TO PREVENT OVERGROWTH FROM COMPROMISING THE REQUIRED VOLUMES IN THE BASIN. VEGETATION SHALL NOT BE MOWED TO LESS THAN 12" WITHIN THE BASIN BOTTOMS AND SIDE SLOPES.
   f. ACCUMULATED SEDIMENT SHALL BE REMOVED FROM THE POND EVERY 1-5 YEARS, AS NEEDED DUE TO CONDITIONS AND INSPECTIONS.
2. ALL STORM INLETS AND TRENCH DRAINS AND THEIR PIPES SHALL BE VISUALLY INSPECTED ANNUALLY PRIOR TO HURRICANE SEASON AND AFTER EVERY MAJOR STORM EVENT. ANY SEDIMENT OR DEBRIS THAT HAS COLLECTED IN THE STRUCTURES OR THE PIPES SHALL BE REMOVED.
3. ALL PERMANENT SWALES AND GHUTS SHALL BE VISUALLY INSPECTED IN JUNE.
   a. ANY NECESSARY REPAIRS, REGRADING, SEEDING AND MULCHING SHALL BE COMPLETED BEFORE JULY 1, OF THAT YEAR.
   b. AREAS OF THIN OR BARE OF VEGETATION SHALL BE RAKED, SEEDED AND MULCHED ACCORDING TO THE ORIGINAL SPECIFICATIONS.
   c. ANY SEDIMENT OR DEBRIS THAT HAS COLLECTED CHANNEL SHALL BE REMOVED.
   d. LAWN AND VEGETATED AREAS SHALL BE KEPT MOWED AND PROPERLY GROOMED TO PREVENT OVERGROWTH FROM COMPROMISING THE FUNCTIONING OF THE GHUT CHANNEL. VEGETATION SHALL NOT BE MOWED TO LESS THAN 12" WITHIN THE BASIN BOTTOMS AND SIDE SLOPES.
4. MOWING/TRIMMING OF BASIN SLOPE AREAS SHOULD BE PERFORMED AS NEEDED, HOWEVER VEGETATION ON THE BASIN SLOPES AND IN THE BOTTOM OF THE BASIN SHALL NOT BE MOWED TO LESS THAN 12" IN HEIGHT.
5. THE FOLLOWING CHECKLIST MAY BE USED TO AID IN THE MAINTENANCE AND INSPECTION PROGRAM ON-SITE:
   a. OBSTRUCTIONS OF THE INLET OR OUTLET DEVISES BY TRASH AND DEBRIS.
   b. EXCESSIVE EROSION OR SEDIMENTATION.
   c. CRACKING OR SETTLING.
   d. ANIMAL BURROWING.
   e. SLUGGISHLY DRAINING BASIN OR INLETS.
   f. ALGAE GROWTH, STAGNANT POOLS, OR NOXIOUS ODORS.
   g. POOR OR DISTRESSED VEGETATION.
   h. DISTRESSED AQUATIC VEGETATION.
   i. DETERIORATED, CRACKED, OR DAMAGED TRENCH DRAINS, INLETS, PIPES AND CONDUITS.
   j. WASHOUTS, BULGES, OR SUMPS.
   k. K) SEEPAGE
   l. UNSTABLE SIDE SLOPES AND EMBANKMENTS.
   m. DETERIORATION OF CHANNELS.
   n. SIGNS OF VANDALISM.
   o. PIPING ALONG OUTLET BARREL.
   p. DETERIORATION/SCOURING AT ENERGY DISSIPATERS OR ROCK RIP-RAP.
   q. OUTLET PROTECTION.
   r. SEDIMENTATION CLOGGING RIP-RAP AREAS.
6. FOR ALL SEDIMENT REMOVAL, THE ACCUMULATED SEDIMENT SHALL BE EITHER REMOVED FROM THE SITE OR DISPOSED OF ON-SITE AT AN APPROVED DISPOSAL AREA. PRIOR TO ON-SITE DISPOSAL OF SEDIMENT, THE OWNER SHALL ACQUIRE THE APPROPRIATE EARTH DISTURBANCE PERMITS. DISTURBED AREAS FOR REMOVAL AND PLACEMENT OF SEDIMENT SHALL BE RAKED, SEEDED AND MULCHED ACCORDING TO THE ORIGINAL SPECIFICATIONS.
7. OWNER SHALL BE RESPONSIBLE FOR ALL MAINTENANCE REQUIRED, INCLUDING PERMANENT STORMWATER BASINS, GHUT CHANNEL, STORM SEWER AND STORM STRUCTURES.
8. OWNER SHALL ENSURE STANDING WATER IN THE BASINS REMAIN FREE OF MOSQUITO OR OTHER PEST INFESTATION BY REGULAR INSPECTION AND TREATMENT AS NECESSARY.

GENERAL NOTES

1. CONTRACTOR SHALL INSPECT AND VERIFY ALL FIELD DIMENSIONS AND SITE CONDITIONS SHOWN HEREIN BEFORE PROCEEDING WITH THE WORK. DISCREPANCIES BETWEEN FIELD CONDITIONS AND THESE PLANS SHALL BE BROUGHT TO THE ENGINEER'S ATTENTION PRIOR TO ANY COMMENCEMENT OF THE WORK. ONCE CONSTRUCTION HAS BEGUN CONTRACTOR SHALL NOT USE FIELD INFORMATION DISCREPANCIES AS THE BASIS FOR CHANGE ORDER CLAIMS.
2. THE LOCATION OF EXISTING UNDERGROUND UTILITIES ARE SHOWN IN AN APPROXIMATE WAY ONLY AND HAVE NOT BEEN INDEPENDENTLY VERIFIED. THE CONTRACTOR SHALL DETERMINE THE EXACT LOCATION OF ALL EXISTING UTILITIES BEFORE COMMENCING WORK, AND AGREES TO BE FULLY RESPONSIBLE FOR ANY AND ALL DAMAGES WHICH MIGHT BE OCCASIONED BY THE CONTRACTORS FAILURE TO EXACTLY LOCATE AND PRESERVE ANY AND ALL UNDERGROUND UTILITIES.

KEY

ESTCT	*Existing Cistern For Roof Drain Collection*
OTIN	PROVIDE OIL AND TRASH INTERCEPTOR VAULT
OTS	PROVIDE OUTLET STRUCTURE
PTD	PROVIDE TRENCH DRAIN
RSB	PROVIDE RIP RAP STONE BED
SDTD	PROVIDE TRENCH DRAIN SEDIMENT TRAP
STCT	PROVIDE CISTERN FOR ROOF DRAIN COLLECTION
STEW	PROVIDE CONCRETE ENDWALL
STPD	PROVIDE STORM PRE-TREATMENT DEVICE
STPUP	PROVIDE PEDESTRIAN UNIT PAVER W/ UNDER DRAIN
STS	PROVIDE STORM SEWER
STUB	PROVIDE STORM UNDERGROUND BASIN
SWMA	PROVIDE STORMWATER MANAGEMENT AREA
VCBS	PROVIDE PERMANENT TURF REINFORCEMENT MATTING
VSID	PROVIDE VERTICAL STONE INTERCEPTOR DRAIN

LEGEND

Symbol	Description
	Right of Way Line
	Property Line
	Storm Sewer Pipe
	Fence Line
0	*Contour*
	Building Adjacent
	Building
	Roof Overhang
	FEMA 100Yr Floodplain
CgC / CbC	*Soil Boundry with Soil Types*
+0.00	*Spot Elevation*
Inlet	*Storm Sewer Inlet*
Headwall	*Storm Sewer Headwall*
S	*Manhole*
	Dry Stone Retaining Wall
	Signs
	Trees
Cist.	*Existing Cistern*
Curb	*Existing Curb*
Conc. Pvg.	*Existing Concrete Paving*
Fnc	*Existing Fence*
Gncp	*Existing Generator on Concrete Pad*
Open Space	*Existing Open Space Area*
Ramp	*Existing Ramp*
Sptc.	*Existing Septic*
Strs	*Existing Stairs*
Stlg	*Existing Stairs and Landing*
Xfcp	*Existing Transformer on Concrete Pad*
	BUILDING
	PAVEMENT TO BE REMOVED
	FUTURE BUILDING
	NEW PEDESTRIAN UNIT PAVERS
	NEW LANDSCAPE AREA
	NEW CONCRETE PAVING
	NEW CONCRETE SIDEWALK
	NEW PERMEABLE PAVERS
	NEW PERMANENT TURF REINFORCEMENT MATTING
	NEW ROCK STABILIZATION BLANKET
0	NEW CONTOUR
+0.00	NEW SPOT GRADE
0	PARKING SPACES
MH	NEW MANHOLE
OTS	NEW OUTLET STRUCTURE
SD	NEW SEDIMENT TRAP
ST	NEW STORM LINE
S	NEW SANITARY LINE
FM	NEW SANITARY FORCE MAIN
W	NEW WATER LINE
RW	NEW RECYCLED WATER LINE
E	NEW UNDERGROUND ELECTRIC LINE
	NEW UNDERGROUND STORM WATER MANAGEMENT AREA
	NEW VERTICAL STONE INTERCEPTOR DRAIN
	NEW TRENCH DRAIN
	NEW END WALL

GRAPHIC SCALE
0 15 30 60 120

YACHT CLUB AT SUMMER'S END
CORAL BAY, ST. JOHN, USVI
Prepared for:
The Summer's End Group, LLC
5000 Estate Enighed, Suite 63
St. John, USVI 00830
340.777.9075

SEAL:
PROFESSIONAL ENGINEER
JOSEPH A. MINA
1049E
VIRGIN ISLANDS

Documents prepared by Cairone & Kaupp, Incorporated are instruments of service for use solely with respect to this Project and unless otherwise provided, Cairone & Kaupp, Incorporated shall be deemed the author of these documents and shall retain all common law, statutory and other reserved rights, including the copyright. They are not intended or represented to be suitable for reuse by Owner or others on extension of the Project or on any other project. Any reuse without written verification or adoption by Cairone & Kaupp, Incorporated will be at Owner's sole risk and without liability or legal exposure to Cairone & Kaupp, Incorporated; and Owner shall indemnify and hold harmless Cairone & Kaupp, Incorporated from all claims, damages, losses and expenses including attorney's fees arising out of or resulting therefrom.

Date	No.	Revision	By
06-23-14	1	FINAL CZM SUBMISSION	JAM

ENVIRONMENTAL:
Bioimpact, Inc.
P.O. Box 132 Kingshill
St. Croix, U.S. Virgin Islands 00851
340 690-8445 Fax 340 718-3800
bioimpact.islands.vi@gmail.com

SURVEY:
MARVIN BERNING & ASSOCIATES
LAND SURVEYORS SUBDIVISION PLANNING PROPERTY SURVEYS
6501 Red Hook Plaza, Suite 201,
Saint Thomas,VI 00802-1306
340-775-6557 email: hgvisurvey@gmail.com

TRAFFIC:
HCA Homer & Canter Associates A Professional Corporation
TRANSPORTATION AND TRAFFIC ENGINEERING
105 Atsion Road - Suite F
Medford, New Jersey 08055
(609) 654-4104
4950 York Road - Suite 2C
Holicong, Pennsylvania 18928-031
(267) 544-0508

PRIME:
ATM APPLIED TECHNOLOGY & MANAGEMENT
Applied Technology & Management, Inc.
411 Pablo Avenue
Jacksonville Beach, FL 32250
O: 904-249-8009
www.appliedtm.com
Coastal, Environmental, Marine, and Water Resource Engineering

CIVIL:
Cairone & Kaupp, Inc.
Landscape Architecture
Civil Engineering
1118 East Columbia Avenue
Philadelphia, PA 19125 4206
Phone: 215 291 2800
Fax: 215 291 2804
www.caironekaupp.com

Drawing Title:

STORM WATER MANAGEMENT PLAN

PROJECT AREA

Project No.:	1220
Drawn By:	RMB
Approved By:	JAM
Scale:	1" = 30'
Date:	28MAR14
Drawing No.:	C400
Sheet	11 of 15

SEQUENCE OF CONSTRUCTION

1. ALL EARTH DISTURBANCE ACTIVITIES SHALL PROCEED IN ACCORDANCE WITH THE FOLLOWING SEQUENCE. EACH STAGE SHALL BE COMPLETED BEFORE ANY FOLLOWING STAGE IS INITIATED. CLEARING AND GRUBBING SHALL BE LIMITED TO THOSE AREAS DESCRIBED IN EACH STAGE.

2. ALL EROSION AND SEDIMENT CONTROLS MUST BE CONSTRUCTED, STABILIZED, AND FUNCTIONAL BEFORE SITE DISTURBANCE WITHIN THE TRIBUTARY AREAS OF THOSE CONTROLS. ONLY LIMITED DISTURBANCE IS PERMITTED TO PROVIDE ACCESS TO THE EROSION AND SEDIMENT CONTROL AREAS FOR GRADING AND ACQUIRING BORROW TO CONSTRUCT THOSE CONTROLS.

3. OUTLINE EACH STAGE'S LIMIT OF DISTURBANCE ORANGE BARRIER FENCE TO PROTECT FROM ENCROACHMENT AND TO DEFINE WORK AREAS. NO DISTURBANCE OUTSIDE OF THESE AREAS IS PERMITTED UNTIL AREA WITHIN THE ACTIVE STAGE IS STABILIZED.

4. STAGE 1 – ROADWAY WORK ALONG ROUTE 107 AND ADJACENT PARKING AND WALKWAY IMPROVEMENTS.
   a. INSTALL CONSTRUCTION ACCESS AND MATERIALS STORAGE AREA ON LOTS 10–17 & 18 AS SHOWN ON PLANS. INSTALL ROCK CONSTRUCTION ENTRANCE. INSTALL PERIMETER CONSTRUCTION FENCING AROUND TEMPORARY CONTRACTOR PARKING AND LAYDOWN AREA. INSTALL TEMPORARY GRAVEL PARKING BED. INSTALL TEMPORARY TRAILERS FOR CONSTRUCTION OFFICES.
   b. INSTALL TREE PROTECTION FENCE AROUND TREES AND VEGETATED AREAS TO REMAIN, FILTER FABRIC FENCE AS INDICATED ON PLANS.
   c. BEGIN MARINA/DOCK CONSTRUCTION. REFER TO PLANS BY OTHERS FOR SPECIFIC WORK WITHIN SUBMERGED LANDS AREAS.
   d. CONSTRUCT ABOVE GROUND AREAS OF STORMWATER MANAGEMENT AREA.
      i. WORK IN THE GHUT SHALL BE CONSTRUCTED AT A TIME OF NO FLOW.
      ii. ROUGH GRADE TO THE PROPOSED SUB–GRADE ELEVATION AND GRADIENT.
      iii. INSTALL OUTLET STRUCTURE AND PIPING TO CONNECT TO EXISTING CULVERT UNDER ROUTE 107. COVER THE OUTLET STRUCTURE ORIFICE OPENINGS WITH PLYWOOD TO PROVIDE A WATERTIGHT SEAL. INSTALL FILTER BAG INLET PROTECTION ON THE GRATE OF THE OUTLET STRUCTURE.
      iv. FINE GRADE TO FINAL GRADES. SPREAD TOPSOIL ON BASIN SLOPES.
      v. INSTALL TEMPORARY BAFFLE STRUCTURE IN BASIN BOTTOM.
      vi. INSTALL PERMANENT EROSION CONTROL BLANKET ON BASIN SLOPES AND IMMEDIATELY SEED AND STABILIZE. DO NOT INSTALL BLANKET ON BOTTOM OF BASIN UNTIL ALL WORK IS COMPLETED AND BAFFLES ARE REMOVED.
      vii. THE BASIN MUST BE CONSTRUCTED, STABILIZED, AND CAPABLE OF HANDLING STORMWATER RUNOFF PRIOR TO ANY ADDITIONAL EARTHMOVING ACTIVITIES.
   e. CLEAR AND GRUB AREAS WITHIN STAGE. REMOVE EXISTING STRUCTURES, CONCRETE, GRAVEL AREAS WITH THE EXCEPTION OF THE ACTUAL ROAD CARTWAY.
   f. STRIP TOPSOIL FROM PROPOSED AREAS. REMOVE OR STOCKPILE TOPSOIL WHERE INDICATED ON PLAN FOR USE WITH FINAL GRADING. INSTALL PERIMETER FILTER FABRIC FENCE AND IMMEDIATELY APPLY TEMPORARY SEEDING AND MULCHING TO THE STOCKPILES. STOCKPILE HEIGHTS MUST NOT EXCEED 35 FEET. STOCKPILE SLOPES MUST BE 2:1 OR FLATTER.
   g. CONSTRUCT ROADWAY IMPROVEMENTS.
      i. ROADWAY SHALL BE CONSTRUCTED IN SUCH A MANNER TO MAINTAIN ACCESS AT ALL TIMES. ONLY ½ OF THE ROADWAY WILL BE UNDER CONSTRUCTION AT A TIME TO ALLOW TRAFFIC TO PASS. ADDITIONAL SIGNALS, FLAG PERSONS, OR OTHER TRAFFIC CONTROL DEVICES, AS REQUIRED BY PUBLIC WORKS, WILL BE INCORPORATED BY THE CONTRACTOR TO ENSURE PASSAGE OF TRAFFIC, EMERGENCY VEHICLES, PEDESTRIANS, AND ALL USUAL ROAD ACCESS DURING CONSTRUCTION. INSTALL ROADWAY ACROSS STREAM AND CULVERT.
      ii. REMOVE PAVING AND SUBBASE MATERIAL DOWN TO NATIVE SOIL.
      iii. ROUGH GRADE ROADWAY TO THE PROPOSED SUB–GRADE ELEVATION AND GRADIENT. PREPARE SOIL FOR INSTALLATION OF NEW ROADWAY PER USVI PUBLIC WORKS STANDARDS AND SPECIFICATIONS.
      iv. INSTALL UNDERGROUND UTILITIES. (ELECTRIC, SANITARY, WATER, AND OTHER CONNECTIONS TO THE DOCK STRUCTURE)
      v. INSTALL GRAVEL BASE COURSE.
      vi. INSTALL CONCRETE SURFACE COURSE.
      vii. ALLOW APPROPRIATE CURING TIME PRIOR TO DIRECTING TRAFFIC ONTO NEW ROADWAY SURFACES.
      viii. WHEN AREAS OF INSTALLED ROADWAY ARE SUITABLE FOR USE, BEGIN WORK ON OPPOSITE SIDE OF ROADWAY IN SAME MANNER AS DESCRIBED ABOVE.
   h. FINE GRADE AND COMPLETE LANDSCAPING IN AREAS THAT WILL NOT BE DISTURBED IN THE FUTURE.
   i. AFTER STAGE 1 AREA STABILIZATION HAS BEEN ACHIEVED, STAGE SPECIFIC TEMPORARY EROSION AND SEDIMENT CONTROLS MUST BE REMOVED. THE STANDARD FOR A STABILIZED, EROSION RESISTANT, PERENNIAL VEGETATIVE COVER WILL BE A UNIFORM COVERAGE OR DENSITY OF 70% ACROSS THE DISTURBED AREA. AREAS DISTURBED DURING REMOVAL OF THE CONTROLS MUST BE STABILIZED IMMEDIATELY.
      i. REMOVE SILT FENCE ALONG PERIMETER OF ROADWAY ALONG BAY FRONTAGE. SILT FENCE BEHIND PARCELS 10–17, 18, & 19 TO REMAIN UNTIL COMPLETION OF ALL WORK ON–SITE.
      ii. REMOVE PERIMETER BARRIER FENCE SPECIFIC TO STAGE 1 ROADWAY WORK.
      iii. NO CONTROLS WITHIN THE STORMWATER MANAGEMENT AREA SHALL BE REMOVED AT THIS STAGE.
      iv. CONSTRUCTION LAYDOWN AREA AND CONTRACTOR PARKING AREA SHALL REMAIN IN PLACE FOR THE DURATION OF WORK.
   j. DOCK CONSTRUCTION AND OTHER WORK WITHIN THE SUBMERGED LANDS AREA DOES NOT NEED TO BE COMPLETED PRIOR TO MOVING ON TO THE NEXT STAGE.

5. STAGE 2 – PARCELS REMAINDER 13, 13A AND 13 B IMPROVEMENTS.
   a. INSTALL ROCK CONSTRUCTION ENTRANCE.
   b. INSTALL TREE PROTECTION FENCE AROUND TREES AND VEGETATED AREAS TO REMAIN, AND FILTER FABRIC FENCE AS INDICATED ON PLANS.
   c. CLEAR AND GRUB AREAS WITHIN STAGE. REMOVE EXISTING STRUCTURES, CONCRETE, GRAVEL AREAS.
   d. STRIP TOPSOIL FROM PROPOSED AREAS. REMOVE OR STOCKPILE TOPSOIL WHERE INDICATED ON PLAN FOR USE WITH FINAL GRADING. INSTALL PERIMETER FILTER FABRIC FENCE AND IMMEDIATELY APPLY TEMPORARY SEEDING AND MULCHING TO THE STOCKPILES. STOCKPILE HEIGHTS MUST NOT EXCEED 35 FEET. STOCKPILE SLOPES MUST BE 2:1 OR FLATTER.
   e. ROUGH GRADE DRIVEWAY, BUILDING, AND LOT AREAS TO THE PROPOSED SUB–GRADE ELEVATION AND GRADIENT.
   f. INSTALL CULVERTS ON GHUT.
   g. INSTALL TRENCH DRAINS, STORM SEWER, HEADWALLS, PERMANENT ROCK ENERGY DISSIPATERS, INLET PROTECTION AND WATER FEATURE/BASIN IN FRONT OF BUILDING 7.
   h. INSTALL SANITARY SEWER TREATMENT AND PIPING, PERMANENT ROCK ENERGY DISSIPATERS, AND REMAINING UNDERGROUND UTILITIES.
   i. FINE GRADE BUILDING, DRIVEWAY AND PARKING AREAS. SPREAD TOPSOIL. CONSTRUCT SUBBASE FOR PARKING AREAS AND DRIVEWAYS.
   j. INSTALL CONCRETE SURFACE COURSE AND SIDEWALKS. ALLOW APPROPRIATE CURING TIME PRIOR TO DIRECTING TRAFFIC ONTO NEW ROADWAY SURFACES.
   k. AFTER STAGE 2 AREA STABILIZATION HAS BEEN ACHIEVED, STAGE SPECIFIC TEMPORARY EROSION AND SEDIMENT CONTROLS MUST BE REMOVED. THE STANDARD FOR A STABILIZED, EROSION RESISTANT, PERENNIAL VEGETATIVE COVER WILL BE A UNIFORM COVERAGE OR DENSITY OF 70% ACROSS THE DISTURBED AREA. AREAS DISTURBED DURING REMOVAL OF THE CONTROLS MUST BE STABILIZED IMMEDIATELY.
      i. REMOVE SILT FENCE ALONG GHUT AND ALONG ROUTE 107 FRONTAGE.
      ii. REMOVE PERIMETER BARRIER FENCE SPECIFIC TO STAGE 2 WORK.
      iii. NO CONTROLS WITHIN THE STORMWATER MANAGEMENT AREA SHALL BE REMOVED AT THIS STAGE.

6. STAGE 3 – PARCEL 41 REMAINDER AND ESTATE ROAD IMPROVEMENTS.
   a. INSTALL ROCK CONSTRUCTION ENTRANCE.
   b. INSTALL TREE PROTECTION FENCE AROUND TREES AND VEGETATED AREAS TO REMAIN, AND FILTER FABRIC FENCE AS INDICATED ON PLANS.
   c. CLEAR AND GRUB AREAS WITHIN STAGE. REMOVE EXISTING STRUCTURES, CONCRETE, GRAVEL AREAS.
   d. STRIP TOPSOIL FROM PROPOSED AREAS. REMOVE OR STOCKPILE TOPSOIL WHERE INDICATED ON PLAN FOR USE WITH FINAL GRADING. INSTALL PERIMETER FILTER FABRIC FENCE AND IMMEDIATELY APPLY TEMPORARY SEEDING AND MULCHING TO THE STOCKPILES. STOCKPILE HEIGHTS MUST NOT EXCEED 35 FEET. STOCKPILE SLOPES MUST BE 2:1 OR FLATTER.
   e. ROUGH GRADE DRIVEWAY, BUILDING, AND LOT AREAS TO THE PROPOSED SUB–GRADE ELEVATION AND GRADIENT.
   f. CONSTRUCT STORMWATER MANAGEMENT UNDERGROUND BASIN AREA.
      i. WORK SHALL BE CONSTRUCTED AT A TIME OF NO FLOW.
      ii. ROUGH GRADE TO THE PROPOSED SUB–GRADE ELEVATION AND GRADIENT.
      iii. INSTALL BLOCK WALL OUTLET STRUCTURE AND PIPING TO CONNECT TO ABOVE GROUND BASIN AREA. INSTALL RIP–RAP FILTER.
      iv. INSTALL R–TANK UNDERGROUND BASIN PER DETAILS AND MANUFACTURERS INSTRUCTIONS.
      v. INSTALL CONNECTIONS TO ATTACHED STORM SEWER SYSTEMS PRIOR TO WRAPPING IN LINER.
      vi. ROUGH GRADE PARKING AREA ABOVE BASIN TO PROPOSED SUB–GRADE ELEVATION AND GRADIENT.
   g. INSTALL TRENCH DRAINS, INLETS, STORM SEWERS, HEADWALLS, PERMANENT ROCK ENERGY DISSIPATERS, AND INLET PROTECTION.
   h. INSTALL SANITARY SEWER TREATMENT AND PIPING, AND REMAINING UNDERGROUND UTILITIES.
   i. FINE GRADE BUILDING, DRIVEWAY AND PARKING AREAS. CONSTRUCT SUBBASE FOR PARKING AREAS AND DRIVEWAYS.
   j. INSTALL CONCRETE SURFACE COURSE AND SIDEWALKS. ALLOW APPROPRIATE CURING TIME PRIOR TO DIRECTING TRAFFIC ONTO NEW ROADWAY SURFACES.
   k. AFTER STAGE 3 AREA STABILIZATION HAS BEEN ACHIEVED, STAGE SPECIFIC TEMPORARY EROSION AND SEDIMENT CONTROLS MUST BE REMOVED. THE STANDARD FOR A STABILIZED, EROSION RESISTANT, PERENNIAL VEGETATIVE COVER WILL BE A UNIFORM COVERAGE OR DENSITY OF 70% ACROSS THE DISTURBED AREA. AREAS DISTURBED DURING REMOVAL OF THE CONTROLS MUST BE STABILIZED IMMEDIATELY.
      i. REMOVE SILT FENCE ALONG GHUT AND ALONG ROUTE 107 FRONTAGE.
      ii. REMOVE PERIMETER BARRIER FENCE SPECIFIC TO STAGE 3 WORK.
      iii. CONVERT BASIN TO PERMANENT CONDITIONS.
1. REMOVE TEMPORARY BAFFLE STRUCTURE.
2. REMOVE ANY ACCUMULATED SEDIMENT IN THE BOTTOM AND DISPOSE OF APPROPRIATELY.
3. FINE GRADE TO PROPOSED ELEVATION AND GRADIENT.
4. SPREAD TOPSOIL AND INSTALL EROSION CONTROL BLANKET IN THE BOTTOM OF THE ABOVE GROUND BASIN.
5. REMOVE TEMPORARY PLYWOOD OVER BASIN ORIFICE OPENINGS AND REMOVE FILTER BAG INLET PROTECTION FROM OUTLET STRUCTURE.

7. STAGE 4 – PARCEL 10–17, 18, & 19.
   a. USE ROCK CONSTRUCTION ENTRANCE AND OTHER CONTROLS ALREADY IN PLACE ON LOT 10–17, 18 & 19.
   b. CLEAR AND GRUB AREAS WITHIN STAGE. REMOVE EXISTING STRUCTURES, CONCRETE, GRAVEL AREAS.
   c. STRIP TOPSOIL FROM PROPOSED AREAS. REMOVE OR STOCKPILE TOPSOIL WHERE INDICATED ON PLAN FOR USE WITH FINAL GRADING. INSTALL PERIMETER FILTER FABRIC FENCE OR COMPOST SILT SOCK AND IMMEDIATELY APPLY TEMPORARY SEEDING AND MULCHING TO THE STOCKPILES. STOCKPILE HEIGHTS MUST NOT EXCEED 35 FEET. STOCKPILE SLOPES MUST BE 2:1 OR FLATTER.
   d. ROUGH GRADE DRIVEWAY, BUILDING, AND LOT AREAS TO THE PROPOSED SUB–GRADE ELEVATION AND GRADIENT.
   e. CONSTRUCT IMPROVEMENTS TO EXISTING BUILDINGS ON LOT 10–19.
      i. INSTALL NEW WATER AND SANITARY SEWER TREATMENT FACILITIES.
      ii. INSTALL PARKING AREAS AND OTHER ASSOCIATED IMPROVEMENTS AND UTILITIES.
      iii. FINISH GRADE REMAINING LOT AREAS, SPREAD TOPSOIL, CONSTRUCT LANDSCAPING, AND PERMANENTLY SEED AND STABILIZE.
   f. AFTER STAGE 4 AREA STABILIZATION HAS BEEN ACHIEVED, ALL REMAINING TEMPORARY EROSION AND SEDIMENT CONTROLS MUST BE REMOVED. THE STANDARD FOR A STABILIZED, EROSION RESISTANT, PERENNIAL VEGETATIVE COVER WILL BE A UNIFORM COVERAGE OR DENSITY OF 70% ACROSS THE DISTURBED AREA. AREAS DISTURBED DURING REMOVAL OF THE CONTROLS MUST BE STABILIZED IMMEDIATELY.
      i. REMOVE SILT FENCE/COMPOST SILT SOCK.
      ii. REMOVE PERIMETER BARRIER.
      iii. REMOVE INLET FILTERS.
      iv. REMOVE ALL TEMPORARY LAYDOWN AREA MATERIALS AND FENCING.
      v. REMOVE ROCK CONSTRUCTION ENTRANCE.
      vi. REMOVE ANY REMAINING TEMPORARY EROSION AND SEDIMENT CONTROLS AND SEED AND STABILIZE ANY REMAINING DISTURBED AREAS.

8. STAGE 5 – FUTURE BUILDING AREAS.
   a. FUTURE BUILDING CONSTRUCTION SHALL PROCEED ON A BUILDING TO BUILDING BASIS, AS REQUIRED.
      i. INSTALL PERIMETER EROSION AND SEDIMENT CONTROL DEVICES INCLUDING SILT FENCE, COMPOST SILT SOCK, AND OTHER FACILITIES AS DIRECTED ON THE BUILDING PERMIT PLANS.
      ii. CONTRACTOR/OWNER IS RESPONSIBLE FOR ENSURING THAT NO EROSION OR CONTAMINATED MATERIALS ARE DISCHARGED DURING THIS STAGE OF CONSTRUCTION.
      iii. CONSTRUCT BUILDINGS AND ASSOCIATED IMPROVEMENTS AND UTILITIES.
      iv. FINISH GRADE REMAINING LOT AREAS, CONSTRUCT LANDSCAPING, AND PERMANENTLY SEED AND STABILIZE ON A BUILDING BY BUILDING BASIS AS THE BUILDINGS ARE CONSTRUCTED.
      v. THE STANDARD FOR A STABILIZED, EROSION RESISTANT, PERENNIAL VEGETATIVE COVER WILL BE A UNIFORM COVERAGE OR DENSITY OF 70% ACROSS THE DISTURBED AREA. AREAS DISTURBED DURING REMOVAL OF THE CONTROLS MUST BE STABILIZED IMMEDIATELY. GRADE AND PERMANENTLY SEED REMAINING DISTURBED AREAS.

GENERAL NOTES

1. CONTRACTOR SHALL INSPECT AND VERIFY ALL FIELD DIMENSIONS AND SITE CONDITIONS SHOWN HEREIN BEFORE PROCEEDING WITH THE WORK. DISCREPANCIES BETWEEN FIELD CONDITIONS AND THESE PLANS SHALL BE BROUGHT TO THE ENGINEER'S ATTENTION PRIOR TO ANY COMMENCEMENT OF THE WORK. ONCE CONSTRUCTION HAS BEGUN CONTRACTOR SHALL NOT USE FIELD INFORMATION DISCREPANCIES AS THE BASIS FOR CHANGE ORDER CLAIMS.
2. THE LOCATION OF EXISTING UNDERGROUND UTILITIES ARE SHOWN IN AN APPROXIMATE WAY ONLY AND HAVE NOT BEEN INDEPENDENTLY VERIFIED. THE CONTRACTOR SHALL DETERMINE THE EXACT LOCATION OF ALL EXISTING UTILITIES BEFORE COMMENCING WORK, AND AGREES TO BE FULLY RESPONSIBLE FOR ANY AND ALL DAMAGES WHICH MIGHT BE OCCASIONED BY THE CONTRACTORS FAILURE TO EXACTLY LOCATE AND PRESERVE ANY AND ALL UNDERGROUND UTILITIES.

KEY

CF	PROVIDE CONSTRUCTION SECURITY FENCE
COP	PROVIDE RIP–RAP CULVERT OUTLET PROTECTION
INP	PROVIDE INLET PROTECTION
LDA	PROVIDE MATERIALS LAYDOWN AND TEMPORARY CONTRACTOR PARKING AREA
RCE	PROVIDE ROCK CONSTRUCTION ENTRANCE
SBB	PROVIDE SEDIMENT BASIN BAFFLE
SSF	PROVIDE SUPER SILT FENCE
TPF	PROVIDE TREE PROTECTION FENCE
TSA	PROVIDE TOPSOIL STOCKPILE AREA

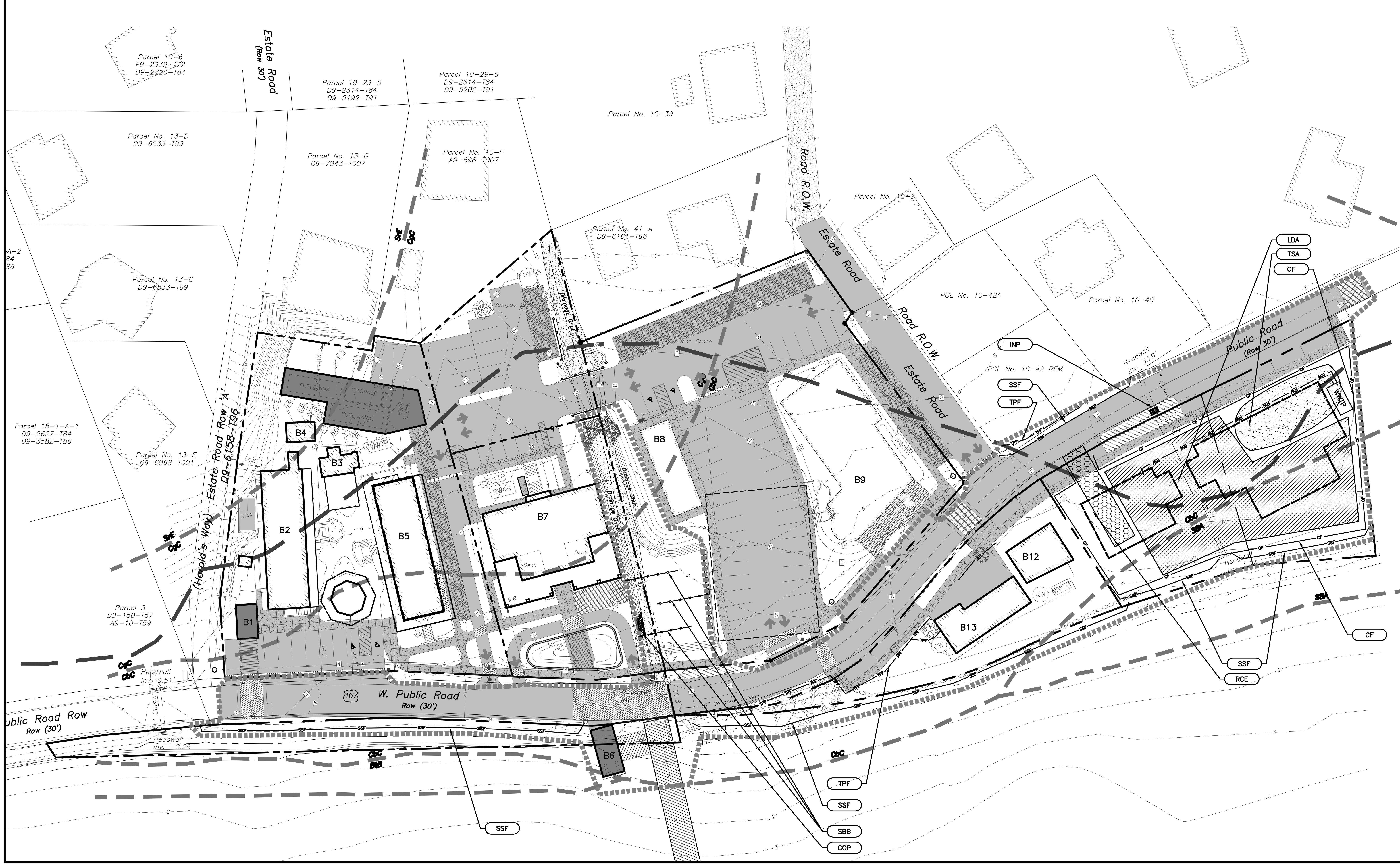

LEGEND

Right of Way Line	
Property Line	
Storm Sewer Pipe	
Fence Line	
Contour	
Building Adjacent	
Building	
Roof Overhang	
FEMA 100Yr Floodplain	
Soil Boundry with Soil Types	CgC / CbC
Spot Elevation	+0.00
Storm Sewer Inlet	Inlet
Storm Sewer Headwall	Headwall
Manhole	
Dry Stone Retaining Wall	
Signs	
Trees	
Existing Cistern	Cist.
Existing Curb	Curb
Existing Concrete Paving	Conc. Pvg.
Existing Fence	Fnc
Existing Generator on Concrete Pad	Gncp
Existing Open Space Area	Open Space
Existing Ramp	Ramp
Existing Septic	Sptc.
Existing Stairs	Strs
Existing Stairs and Landing	Stlg
Existing Transformer on Concrete Pad	Xfcp
BUILDING	
PAVEMENT TO BE REMOVED	
FUTURE BUILDING	
NEW PEDESTRIAN UNIT PAVERS	
NEW LANDSCAPE AREA	
NEW CONCRETE PAVING	
NEW CONCRETE SIDEWALK	
NEW PERMEABLE PAVERS	
NEW PERMANENT TURF REINFORCEMENT MATTING	
NEW ROCK STABILIZATION BLANKET	
NEW CONTOUR	0
NEW SPOT GRADE	+0.00
PARKING SPACES	0
NEW MANHOLE	MH
NEW OUTLET STRUCTURE	OTS
NEW SEDIMENT TRAP	SD
NEW STORM LINE	ST
NEW SANITARY LINE	S
NEW SANITARY FORCE MAIN	FM
NEW WATER LINE	W
NEW RECYCLED WATER LINE	RW
NEW UNDERGROUND ELECTRIC LINE	E
NEW UNDERGROUND STORM WATER MANAGEMENT AREA	
NEW VERTICAL STONE INTERCEPTOR DRAIN	
NEW TRENCH DRAIN	
NEW END WALL	

GRAPHIC SCALE
0 15 30 60 120

YACHT CLUB AT SUMMER'S END
CORAL BAY, ST. JOHN, USVI
Prepared for:
The Summer's End Group, LLC
5000 Estate Enighed, Suite 63
St. John, USVI 00830
340.777.9075

SEAL:
PROFESSIONAL ENGINEER
JOSEPH A. MINA
1049E
VIRGIN ISLANDS

Documents prepared by Cairone & Kaupp, Incorporated are instruments of service for use solely with respect to this Project and unless otherwise provided, Cairone & Kaupp, Incorporated shall be deemed the author of these documents and shall retain all common law, statutory and other reserved rights, including the copyright. They are not intended or represented to be suitable for reuse by Owner or others on extension of the Project or on any other project. Any reuse without written verification or adoption by Cairone & Kaupp, Incorporated will be at Owner's sole risk and without liability or legal exposure to Cairone & Kaupp, Incorporated; and Owner shall indemnify and hold harmless Cairone & Kaupp, Incorporated from all claims, damages, losses and expenses including attorney's fees arising out of or resulting therefrom.

Date	No.	Revision	By
06–23–14	1	FINAL CZM SUBMISSION	JAM

ENVIRONMENTAL:
Bioimpact, Inc.
P.O. Box 132 Kingshill
St. Croix, U.S. Virgin Islands 00851
340 690–8445 Fax 340 718–3800
bioimpact.islands.vi@gmail.com

SURVEY:
MARVIN BERNING & ASSOCIATES
LAND SURVEYORS SUBDIVISION PLANNING PROPERTY SURVEYS
6501 Red Hook Plaza, Suite 201,
Saint Thomas,VI 00802–1306
340–775–6557 email: hgvisurvey@gmail.com

TRAFFIC:
HCA Homer & Carter Associates A Professional Corporation
TRANSPORTATION AND TRAFFIC ENGINEERING
105 Atsion Road – Suite F
Medford, New Jersey 08055
(609) 654–4104
4950 York Road – Suite 2C
Holicong, Pennsylvania 18928–031
(267) 544–0508

PRIME:
ATM APPLIED TECHNOLOGY & MANAGEMENT
Applied Technology & Management, Inc.
411 Pablo Avenue
Jacksonville Beach, FL 32250
O: 904–249–8009
www.appliedtm.com
Coastal, Environmental, Marine, and Water Resource Engineering

CIVIL:
Cairone & Kaupp, Inc.
Landscape Architecture
Civil Engineering
1118 East Columbia Avenue
Philadelphia, PA 19125 4206
Phone: 215 291 2800
Fax: 215 291 2804
www.caironekaupp.com

Drawing Title:
EROSION & SEDIMENT CONTROL PLAN OVERALL AND STAGE 1

Project No.:	1220
Drawn By:	RMB
Approved By:	JAM
Scale:	1" = 30'
Date:	28MAR14
Drawing No.:	C500
Sheet	12 of 15

P:\2012\1220–usvi marina\Cad\Current\1220C–C500.dwg | Jun 23, 2014 – 1:37pm | JMina | Cairone & Kaupp, Inc.

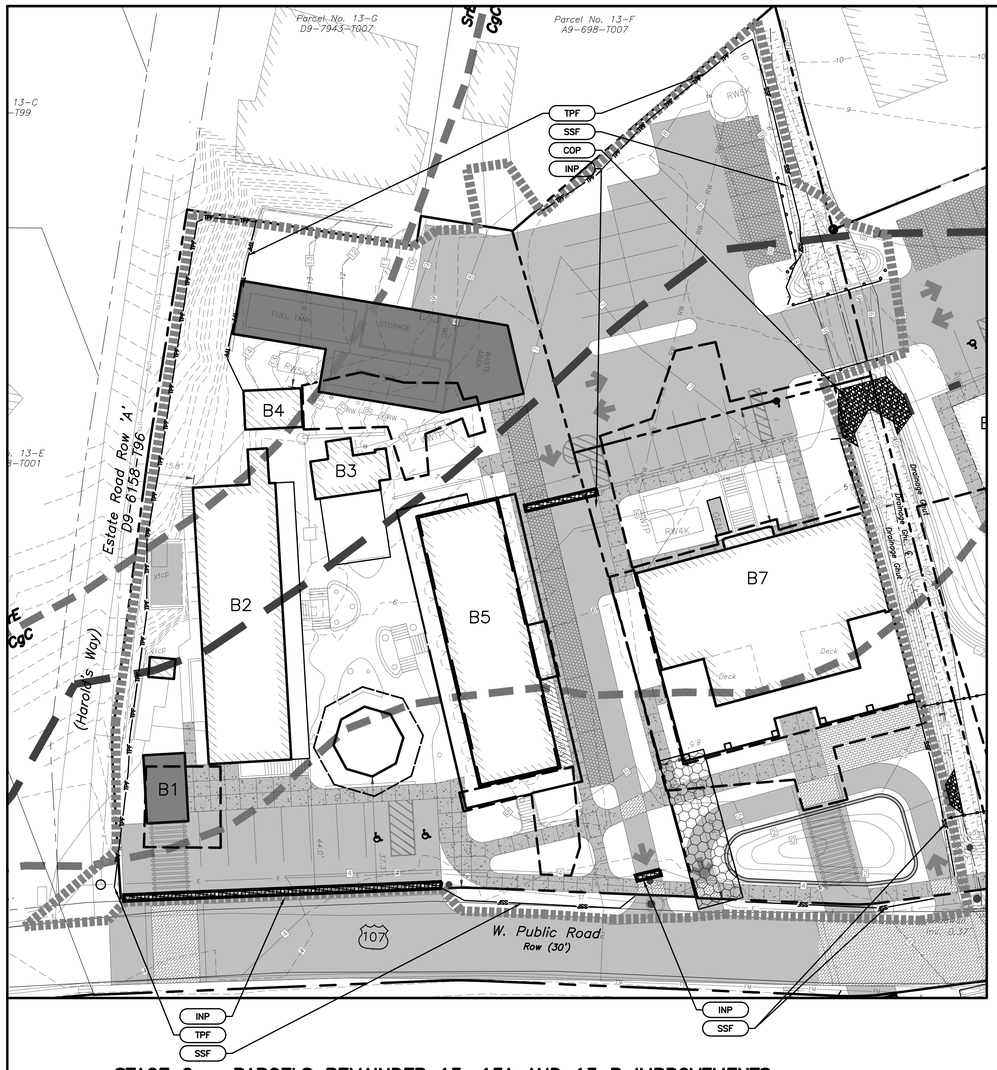

STAGE 2 – PARCELS REMAINDER 13, 13A AND 13 B IMPROVEMENTS.

a. INSTALL ROCK CONSTRUCTION ENTRANCE.
b. INSTALL TREE PROTECTION FENCE AROUND TREES AND VEGETATED AREAS TO REMAIN, AND FILTER FABRIC FENCE AS INDICATED ON PLANS.
c. CLEAR AND GRUB AREAS WITHIN STAGE. REMOVE EXISTING STRUCTURES, CONCRETE, GRAVEL AREAS.
d. STRIP TOPSOIL FROM PROPOSED AREAS. REMOVE OR STOCKPILE TOPSOIL WHERE INDICATED ON PLAN FOR USE WITH FINAL GRADING. INSTALL PERIMETER FILTER FABRIC FENCE AND IMMEDIATELY APPLY TEMPORARY SEEDING AND MULCHING TO THE STOCKPILES. STOCKPILE HEIGHTS MUST NOT EXCEED 35 FEET. STOCKPILE SLOPES MUST BE 2:1 OR FLATTER.
e. ROUGH GRADE DRIVEWAY, BUILDING, AND LOT AREAS TO THE PROPOSED SUB-GRADE ELEVATION AND GRADIENT.
f. INSTALL CULVERTS ON GHUT.
g. INSTALL TRENCH DRAINS, STORM SEWER, HEADWALLS, PERMANENT ROCK ENERGY DISSIPATERS, INLET PROTECTION AND WATER FEATURE/BASIN IN FRONT OF BUILDING 7.
h. INSTALL SANITARY SEWER TREATMENT AND PIPING, PERMANENT ROCK ENERGY DISSIPATERS, AND REMAINING UNDERGROUND UTILITIES.
i. FINE GRADE BUILDING, DRIVEWAY AND PARKING AREAS. SPREAD TOPSOIL. CONSTRUCT SUBBASE FOR PARKING AREAS AND DRIVEWAYS.
j. INSTALL CONCRETE SURFACE COURSE AND SIDEWALKS. ALLOW APPROPRIATE CURING TIME PRIOR TO DIRECTING TRAFFIC ONTO NEW ROADWAY SURFACES.
k. AFTER STAGE 2 AREA STABILIZATION HAS BEEN ACHIEVED, STAGE SPECIFIC TEMPORARY EROSION AND SEDIMENT CONTROLS MUST BE REMOVED. THE STANDARD FOR A STABILIZED, EROSION RESISTANT, PERENNIAL VEGETATIVE COVER WILL BE A UNIFORM COVERAGE OR DENSITY OF 70% ACROSS THE DISTURBED AREA. AREAS DISTURBED DURING REMOVAL OF THE CONTROLS MUST BE STABILIZED IMMEDIATELY.
i. REMOVE SILT FENCE ALONG GHUT AND ALONG ROUTE 107 FRONTAGE.
ii. REMOVE PERIMETER BARRIER FENCE SPECIFIC TO STAGE 2 WORK.
iii. NO CONTROLS WITHIN THE STORMWATER MANAGEMENT AREA SHALL BE REMOVED AT THIS STAGE.

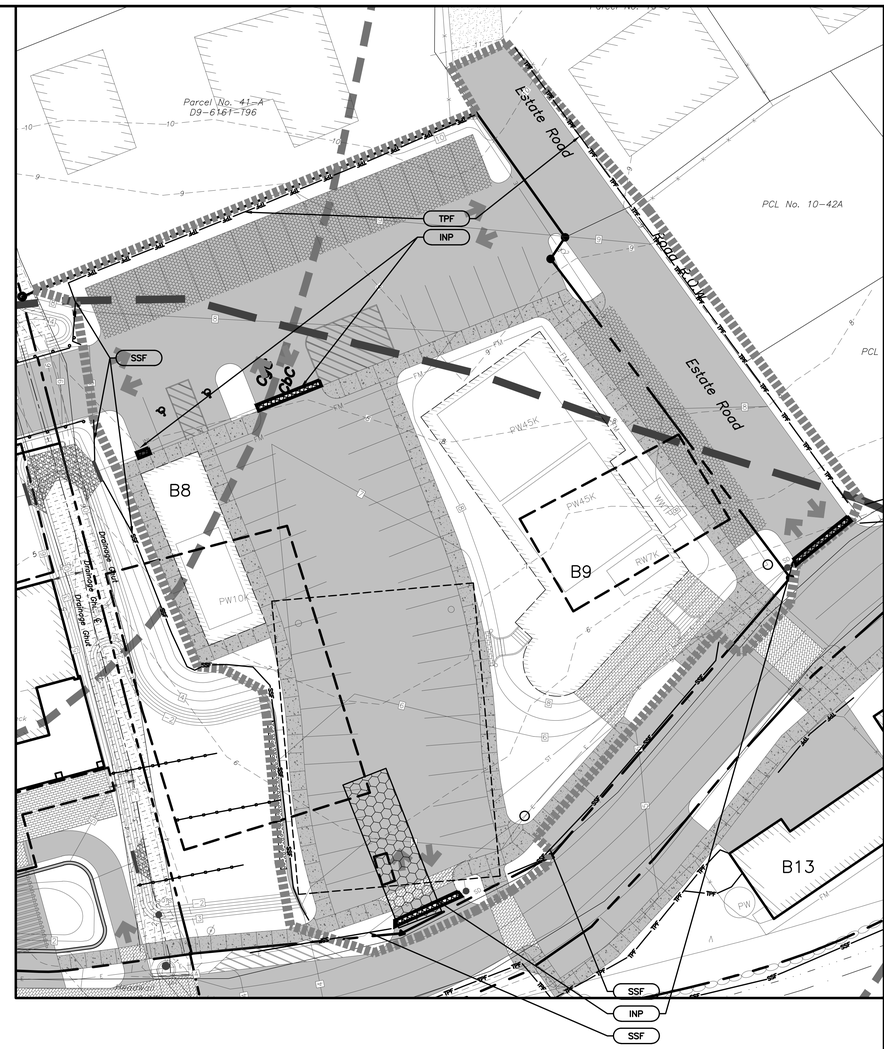

STAGE 3 – PARCEL 41 REMAINDER AND ESTATE ROAD IMPROVEMENTS.

a. INSTALL ROCK CONSTRUCTION ENTRANCE.
b. INSTALL TREE PROTECTION FENCE AROUND TREES AND VEGETATED AREAS TO REMAIN, AND FILTER FABRIC FENCE AS INDICATED ON PLANS.
c. CLEAR AND GRUB AREAS WITHIN STAGE. REMOVE EXISTING STRUCTURES, CONCRETE, GRAVEL AREAS.
d. STRIP TOPSOIL FROM PROPOSED AREAS. REMOVE OR STOCKPILE TOPSOIL WHERE INDICATED ON PLAN FOR USE WITH FINAL GRADING. INSTALL PERIMETER FILTER FABRIC FENCE AND IMMEDIATELY APPLY TEMPORARY SEEDING AND MULCHING TO THE STOCKPILES. STOCKPILE HEIGHTS MUST NOT EXCEED 35 FEET. STOCKPILE SLOPES MUST BE 2:1 OR FLATTER.
e. ROUGH GRADE DRIVEWAY, BUILDING, AND LOT AREAS TO THE PROPOSED SUB-GRADE ELEVATION AND GRADIENT.
f. CONSTRUCT STORMWATER MANAGEMENT UNDERGROUND BASIN AREA.
i. WORK SHALL BE CONSTRUCTED AT A TIME OF NO FLOW.
ii. ROUGH GRADE TO THE PROPOSED SUB-GRADE ELEVATION AND GRADIENT.
iii. INSTALL BLOCK WALL OUTLET STRUCTURE AND PIPING TO CONNECT TO ABOVE GROUND BASIN AREA. INSTALL RIP-RAP FILTER.
iv. INSTALL R-TANK UNDERGROUND BASIN PER DETAILS AND MANUFACTURERS INSTRUCTIONS.
v. INSTALL CONNECTIONS TO ATTACHED STORM SEWER SYSTEMS PRIOR TO WRAPPING IN LINER.
vi. ROUGH GRADE PARKING AREA ABOVE BASIN TO PROPOSED SUB-GRADE ELEVATION AND GRADIENT.
g. INSTALL TRENCH DRAINS, INLETS, STORM SEWERS, HEADWALLS, PERMANENT ROCK ENERGY DISSIPATERS, AND INLET PROTECTION.
h. INSTALL SANITARY SEWER TREATMENT AND PIPING, AND REMAINING UNDERGROUND UTILITIES.
i. FINE GRADE BUILDING, DRIVEWAY AND PARKING AREAS. CONSTRUCT SUBBASE FOR PARKING AREAS AND DRIVEWAYS.
j. INSTALL CONCRETE SURFACE COURSE AND SIDEWALKS. ALLOW APPROPRIATE CURING TIME PRIOR TO DIRECTING TRAFFIC ONTO NEW ROADWAY SURFACES.
k. AFTER STAGE 3 AREA STABILIZATION HAS BEEN ACHIEVED, STAGE SPECIFIC TEMPORARY EROSION AND SEDIMENT CONTROLS MUST BE REMOVED. THE STANDARD FOR A STABILIZED, EROSION RESISTANT, PERENNIAL VEGETATIVE COVER WILL BE A UNIFORM COVERAGE OR DENSITY OF 70% ACROSS THE DISTURBED AREA. AREAS DISTURBED DURING REMOVAL OF THE CONTROLS MUST BE STABILIZED IMMEDIATELY.
i. REMOVE SILT FENCE ALONG GHUT AND ALONG ROUTE 107 FRONTAGE.
ii. REMOVE PERIMETER BARRIER FENCE SPECIFIC TO STAGE 3 WORK.
iii. CONVERT BASIN TO PERMANENT CONDITIONS.
   1. REMOVE TEMPORARY BAFFLE STRUCTURE.
   2. REMOVE ANY ACCUMULATED SEDIMENT IN THE BOTTOM AND DISPOSE OF APPROPRIATELY.
   3. FINE GRADE TO PROPOSED ELEVATION AND GRADIENT.
   4. SPREAD TOPSOIL AND INSTALL EROSION CONTROL BLANKET IN THE BOTTOM OF THE ABOVE GROUND BASIN.
   5. REMOVE TEMPORARY PLYWOOD OVER BASIN ORIFICE OPENINGS AND REMOVE FILTER BAG INLET PROTECTION FROM OUTLET STRUCTURE.

GRAPHIC SCALE
0 10 20 40 80

GENERAL NOTES

1. CONTRACTOR SHALL INSPECT AND VERIFY ALL FIELD DIMENSIONS AND SITE CONDITIONS SHOWN HEREIN BEFORE PROCEEDING WITH THE WORK. DISCREPANCIES BETWEEN FIELD CONDITIONS AND THESE PLANS SHALL BE BROUGHT TO THE ENGINEER'S ATTENTION PRIOR TO ANY COMMENCEMENT OF THE WORK. ONCE CONSTRUCTION HAS BEGUN CONTRACTOR SHALL NOT USE FIELD INFORMATION DISCREPANCIES AS THE BASIS FOR CHANGE ORDER CLAIMS.
2. THE LOCATION OF EXISTING UNDERGROUND UTILITIES ARE SHOWN IN AN APPROXIMATE WAY ONLY AND HAVE NOT BEEN INDEPENDENTLY VERIFIED. THE CONTRACTOR SHALL DETERMINE THE EXACT LOCATION OF ALL EXISTING UTILITIES BEFORE COMMENCING WORK, AND AGREES TO BE FULLY RESPONSIBLE FOR ANY AND ALL DAMAGES WHICH MIGHT BE OCCASIONED BY THE CONTRACTORS FAILURE TO EXACTLY LOCATE AND PRESERVE ANY AND ALL UNDERGROUND UTILITIES.

KEY

COP	PROVIDE RIP-RAP CULVERT OUTLET PROTECTION
INP	PROVIDE INLET PROTECTION
SSF	PROVIDE SUPER SILT FENCE
RCE	PROVIDE ROCK CONSTRUCTION ENTRANCE
TPF	PROVIDE TREE PROTECTION FENCE

LEGEND

Right of Way Line
Property Line
Storm Sewer Pipe
Fence Line
Contour
Building Adjacent
Building
Roof Overhang
FEMA 100Yr Floodplain
CgC CbC Soil Boundry with Soil Types
+0.00 Spot Elevation
Inlet Storm Sewer Inlet
Headwall Storm Sewer Headwall
Manhole
Dry Stone Retaining Wall
Signs
Trees
Cist. Existing Cistern
Curb Existing Curb
Conc. Pvg. Existing Concrete Paving
Fnc Existing Fence
Gncp Existing Generator on Concrete Pad
Open Space Existing Open Space Area
Ramp Existing Ramp
Sptc. Existing Septic
Strs Existing Stairs
Stlg Existing Stairs and Landing
Xfcp Existing Transformer on Concrete Pad
BUILDING
PAVEMENT TO BE REMOVED
FUTURE BUILDING
NEW PEDESTRIAN UNIT PAVERS
NEW LANDSCAPE AREA
NEW CONCRETE PAVING
NEW CONCRETE SIDEWALK
NEW PERMEABLE PAVERS
NEW PERMANENT TURF REINFORCEMENT MATTING
NEW ROCK STABILIZATION BLANKET
NEW CONTOUR
+0.00 NEW SPOT GRADE
PARKING SPACES
MH NEW MANHOLE
OTS NEW OUTLET STRUCTURE
SD NEW SEDIMENT TRAP
ST NEW STORM LINE
S NEW SANITARY LINE
FM NEW SANITARY FORCE MAIN
W NEW WATER LINE
RW NEW RECYCLED WATER LINE
E NEW UNDERGROUND ELECTRIC LINE
NEW UNDERGROUND STORM WATER MANAGEMENT AREA
NEW VERTICAL STONE INTERCEPTOR DRAIN
NEW TRENCH DRAIN
NEW END WALL

YACHT CLUB AT SUMMER'S END

CORAL BAY, ST. JOHN, USVI

Prepared for:
The Summer's End Group, LLC
5000 Estate Enighed, Suite 63
St. John, USVI 00830
340.777.9075

SEAL:
PROFESSIONAL ENGINEER JOSEPH A. MINA 1049E VIRGIN ISLANDS

Documents prepared by Cairone & Kaupp, Incorporated are instruments of service for use solely with respect to this Project and unless otherwise provided, Cairone & Kaupp, Incorporated shall be deemed the author of these documents and shall retain all common law, statutory and other reserved rights, including the copyright. They are not intended or represented to be suitable for reuse by Owner or others on extension of the Project or on any other project. Any reuse without written verification or adoption by Cairone & Kaupp, Incorporated will be at Owner's sole risk and without liability or legal exposure to Cairone & Kaupp, Incorporated; and Owner shall indemnify and hold harmless Cairone & Kaupp, Incorporated from all claims, damages, losses and expenses including attorney's fees arising out of or resulting therefrom.

Date	No.	Revision	By
06-23-14	1	FINAL CZM SUBMISSION	JAM

ENVIRONMENTAL:
Bioimpact, Inc.
P.O. Box 132 Kingshill
St. Croix, U.S. Virgin Islands 00851
340 690-8445 Fax 340 718-3800
bioimpact.islands.vi@gmail.com

SURVEY:
MARVIN BERNING & ASSOCIATES
LAND SURVEYORS SUBDIVISION PLANNING PROPERTY SURVEYS
6501 Red Hook Plaza, Suite 201,
Saint Thomas,VI 00802-1306
340-775-6557 email: bgvisurvey@gmail.com

TRAFFIC:
HCA Hillman & Cocchi Associates
TRANSPORTATION AND TRAFFIC ENGINEERING
305 Alaska Road – Suite F
Blackwood, New Jersey 08012
(856) 654-8104
4950 York Road – Suite 2C
Holicong, Pennsylvania 18928-0231
(267) 544-0508

PRIME:
APPLIED TECHNOLOGY & MANAGEMENT ATM
Applied Technology & Management, Inc.
411 Pablo Avenue
Jacksonville Beach, FL 32250
(904) 246-2580
www.appliedtm.com
Coastal, Environmental, Marine, and Water Resource Engineering

CIVIL:
Cairone & Kaupp, Inc.
Landscape Architecture
Civil Engineering
1118 East Columbia Avenue
Philadelphia, PA 19125 4206
Phone: 215 291 2800
Fax: 215 291 2804
www.caironekaupp.com

Drawing Title:
EROSION & SEDIMENT CONTROL PLAN STAGE 2 AND 3

Project No.: 1220	Drawing No.: C501
Drawn By: RMB	
Approved By: JAM	
Scale: 1" = 20'	
Date: 28MAR14	Sheet 13 of 15

P:\2012\1220-usvi marina\Cad\Current\1220C-C500.dwg | Jun 23, 2014 - 1:37pm | JMina | Cairone & Kaupp, Inc.

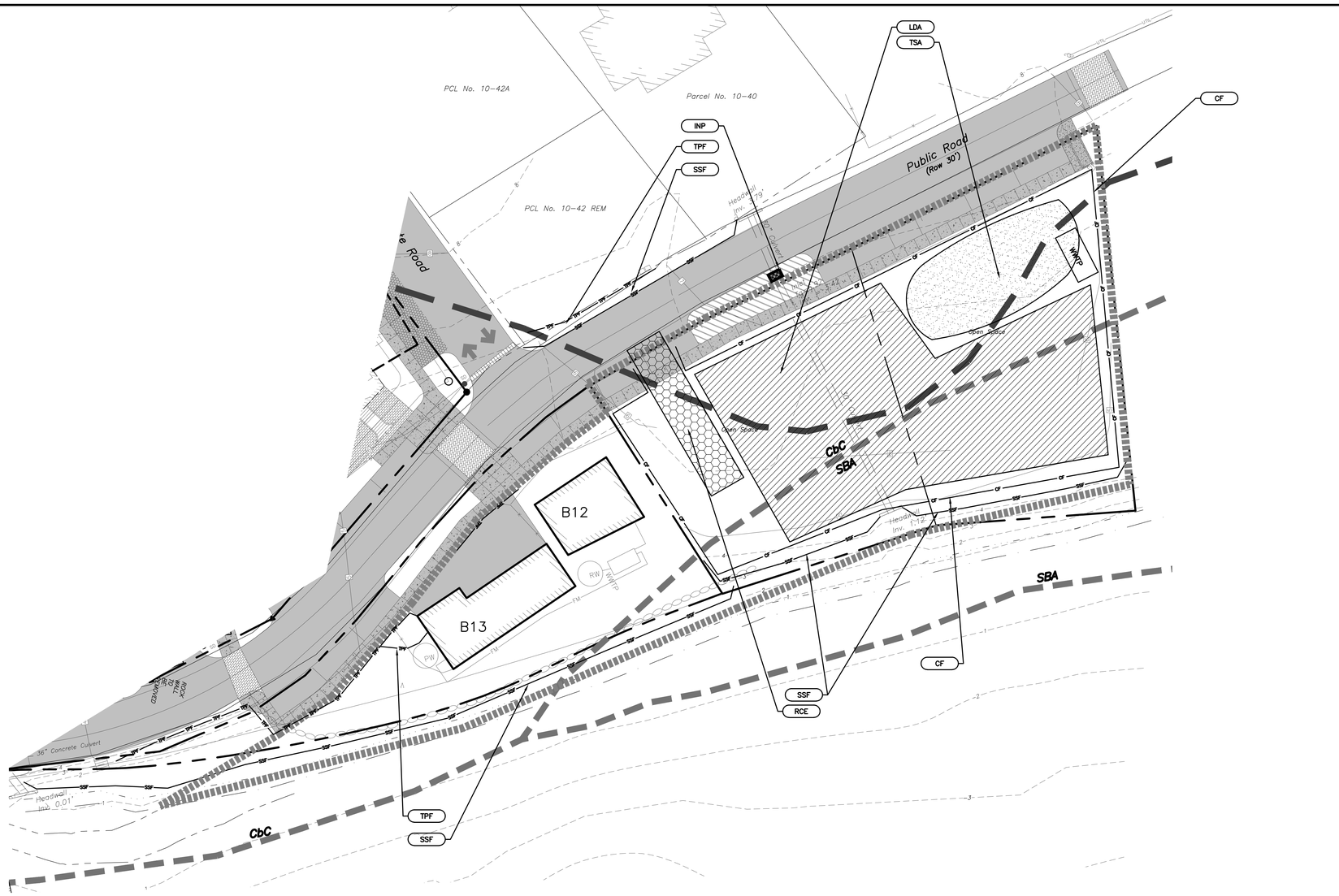

7. STAGE 4 – PARCEL 10–17, 18, & 19.

a. USE ROCK CONSTRUCTION ENTRANCE AND OTHER CONTROLS ALREADY IN PLACE ON LOT 10–17, 18 & 19.
b. CLEAR AND GRUB AREAS WITHIN STAGE. REMOVE EXISTING STRUCTURES, CONCRETE, GRAVEL AREAS.
c. STRIP TOPSOIL FROM PROPOSED AREAS. REMOVE OR STOCKPILE TOPSOIL WHERE INDICATED ON PLAN FOR USE WITH FINAL GRADING. INSTALL PERIMETER FILTER FABRIC FENCE OR COMPOST SILT SOCK AND IMMEDIATELY APPLY TEMPORARY SEEDING AND MULCHING TO THE STOCKPILES. STOCKPILE HEIGHTS MUST NOT EXCEED 35 FEET. STOCKPILE SLOPES MUST BE 2:1 OR FLATTER.
d. ROUGH GRADE DRIVEWAY, BUILDING, AND LOT AREAS TO THE PROPOSED SUB–GRADE ELEVATION AND GRADIENT.
e. CONSTRUCT IMPROVEMENTS TO EXISTING BUILDINGS ON LOT 10–19.
i. INSTALL NEW WATER AND SANITARY SEWER TREATMENT FACILITIES.
ii. INSTALL PARKING AREAS AND OTHER ASSOCIATED IMPROVEMENTS AND UTILITIES.
iii. FINISH GRADE REMAINING LOT AREAS, SPREAD TOPSOIL, CONSTRUCT LANDSCAPING, AND PERMANENTLY SEED AND STABILIZE.
f. AFTER STAGE 4 AREA STABILIZATION HAS BEEN ACHIEVED, ALL REMAINING TEMPORARY EROSION AND SEDIMENT CONTROLS MUST BE REMOVED. THE STANDARD FOR A STABILIZED, EROSION RESISTANT, PERENNIAL VEGETATIVE COVER WILL BE A UNIFORM COVERAGE OR DENSITY OF 70% ACROSS THE DISTURBED AREA. AREAS DISTURBED DURING REMOVAL OF THE CONTROLS MUST BE STABILIZED IMMEDIATELY.
i. REMOVE SILT FENCE/COMPOST SILT SOCK.
ii. REMOVE PERIMETER BARRIER.
iii. REMOVE INLET FILTERS.
iv. REMOVE ALL TEMPORARY LAYDOWN AREA MATERIALS AND FENCING.
v. REMOVE ROCK CONSTRUCTION ENTRANCE.
vi. REMOVE ANY REMAINING TEMPORARY EROSION AND SEDIMENT CONTROLS AND SEED AND STABILIZE ANY REMAINING DISTURBED AREAS.

8. STAGE 5 – FUTURE BUILDING AREAS.

a. FUTURE BUILDING CONSTRUCTION SHALL PROCEED ON A BUILDING TO BUILDING BASIS, AS REQUIRED.
i. INSTALL PERIMETER EROSION AND SEDIMENT CONTROL DEVICES INCLUDING SILT FENCE, COMPOST SILT SOCK, AND OTHER FACILITIES AS DIRECTED ON THE BUILDING PERMIT PLANS.
ii. CONTRACTOR/OWNER IS RESPONSIBLE FOR ENSURING THAT NO EROSION OR CONTAMINATED MATERIALS ARE DISCHARGED DURING THIS STAGE OF CONSTRUCTION.
iii. CONSTRUCT BUILDINGS AND ASSOCIATED IMPROVEMENTS AND UTILITIES.
iv. FINISH GRADE REMAINING LOT AREAS, CONSTRUCT LANDSCAPING, AND PERMANENTLY SEED AND STABILIZE ON A BUILDING BY BUILDING BASIS AS THE BUILDINGS ARE CONSTRUCTED.
v. THE STANDARD FOR A STABILIZED, EROSION RESISTANT, PERENNIAL VEGETATIVE COVER WILL BE A UNIFORM COVERAGE OR DENSITY OF 70% ACROSS THE DISTURBED AREA. AREAS DISTURBED DURING REMOVAL OF THE CONTROLS MUST BE STABILIZED IMMEDIATELY. GRADE AND PERMANENTLY SEED REMAINING DISTURBED AREAS.

GENERAL NOTES

1. CONTRACTOR SHALL INSPECT AND VERIFY ALL FIELD DIMENSIONS AND SITE CONDITIONS SHOWN HEREIN BEFORE PROCEEDING WITH THE WORK. DISCREPANCIES BETWEEN FIELD CONDITIONS AND THESE PLANS SHALL BE BROUGHT TO THE ENGINEER'S ATTENTION PRIOR TO ANY COMMENCEMENT OF THE WORK. ONCE CONSTRUCTION HAS BEGUN CONTRACTOR SHALL NOT USE FIELD INFORMATION DISCREPANCIES AS THE BASIS FOR CHANGE ORDER CLAIMS.
2. THE LOCATION OF EXISTING UNDERGROUND UTILITIES ARE SHOWN IN AN APPROXIMATE WAY ONLY AND HAVE NOT BEEN INDEPENDENTLY VERIFIED. THE CONTRACTOR SHALL DETERMINE THE EXACT LOCATION OF ALL EXISTING UTILITIES BEFORE COMMENCING WORK, AND AGREES TO BE FULLY RESPONSIBLE FOR ANY AND ALL DAMAGES WHICH MIGHT BE OCCASIONED BY THE CONTRACTORS FAILURE TO EXACTLY LOCATE AND PRESERVE ANY AND ALL UNDERGROUND UTILITIES.

KEY

CF	PROVIDE CONSTRUCTION SECURITY FENCE
COP	PROVIDE RIP–RAP CULVERT OUTLET PROTECTION
INP	PROVIDE INLET PROTECTION
LDA	PROVIDE MATERIALS LAYDOWN AND TEMPORARY CONTRACTOR PARKING AREA
RCE	PROVIDE ROCK CONSTRUCTION ENTRANCE
SBB	PROVIDE SEDIMENT BASIN BAFFLE
SSF	PROVIDE SUPER SILT FENCE
TPF	PROVIDE TREE PROTECTION FENCE
TSA	PROVIDE TOPSOIL STOCKPILE AREA

LEGEND

- Right of Way Line
- Property Line
- Storm Sewer Pipe
- Fence Line
- Contour
- Building Adjacent
- Building
- Roof Overhang
- FEMA 100Yr Floodplain
- CgC / CbC — Soil Boundry with Soil Types
- +0.00 — Spot Elevation
- Inlet — Storm Sewer Inlet
- Headwall — Storm Sewer Headwall
- Manhole
- Dry Stone Retaining Wall
- Signs
- Trees
- Cist. — Existing Cistern
- Curb — Existing Curb
- Conc. Pvg. — Existing Concrete Paving
- Fnc — Existing Fence
- Gncp — Existing Generator on Concrete Pad
- Open Space — Existing Open Space Area
- Ramp — Existing Ramp
- Sptc. — Existing Septic
- Strs — Existing Stairs
- Stlg — Existing Stairs and Landing
- Xfcp — Existing Transformer on Concrete Pad
- BUILDING
- PAVEMENT TO BE REMOVED
- FUTURE BUILDING
- NEW PEDESTRIAN UNIT PAVERS
- NEW LANDSCAPE AREA
- NEW CONCRETE PAVING
- NEW CONCRETE SIDEWALK
- NEW PERMEABLE PAVERS
- NEW PERMANENT TURF REINFORCEMENT MATTING
- NEW ROCK STABILIZATION BLANKET
- 0 — NEW CONTOUR
- +0.00 — NEW SPOT GRADE
- 0 — PARKING SPACES
- MH — NEW MANHOLE
- OTS — NEW OUTLET STRUCTURE
- SD — NEW SEDIMENT TRAP
- ST — NEW STORM LINE
- S — NEW SANITARY LINE
- FM — NEW SANITARY FORCE MAIN
- W — NEW WATER LINE
- RW — NEW RECYCLED WATER LINE
- E — NEW UNDERGROUND ELECTRIC LINE
- NEW UNDERGROUND STORM WATER MANAGEMENT AREA
- NEW VERTICAL STONE INTERCEPTOR DRAIN
- NEW TRENCH DRAIN
- NEW END WALL

GRAPHIC SCALE

0 10 20 40 80

YACHT CLUB AT SUMMER'S END

CORAL BAY, ST. JOHN, USVI

Prepared for:

The Summer's End Group, LLC
5000 Estate Enighed, Suite 63
St. John, USVI 00830
340.777.9075

SEAL:

PROFESSIONAL ENGINEER — JOSEPH A. MINA 1049E — VIRGIN ISLANDS

Documents prepared by Cairone & Kaupp, Incorporated are instruments of service for use solely with respect to this Project and unless otherwise provided, Cairone & Kaupp, Incorporated shall be deemed the author of these documents and shall retain all common law, statutory and other reserved rights, including the copyright. They are not intended or represented to be suitable for reuse by Owner or others on extension of the Project or on any other project. Any reuse without written verification or adoption by Cairone & Kaupp, Incorporated will be at Owner's sole risk and without liability or legal exposure to Cairone & Kaupp, Incorporated; and Owner shall indemnify and hold harmless Cairone & Kaupp, Incorporated from all claims, damages, losses and expenses including attorney's fees arising out of or resulting therefrom.

Date	No.	Revision	By
06–23–14	1	FINAL CZM SUBMISSION	JAM

ENVIRONMENTAL:
Bioimpact, Inc.
P.O. Box 132 Kingshill
St. Croix, U.S. Virgin Islands 00851
340 690–8445 Fax 340 718–3800
bioimpact.islands.vi@gmail.com

SURVEY:
MARVIN BERNING & ASSOCIATES
LAND SURVEYORS SUBDIVISION PLANNING PROPERTY SURVEYS
6501 Red Hook Plaza, Suite 201,
Saint Thomas,VI 00802–1306
340–775–6557 email: bgvisurvey@gmail.com

TRAFFIC:
HCA Hocanson & Carter Associates
A PROFESSIONAL CORPORATION
TRANSPORTATION AND TRAFFIC ENGINEERING
Medford, New Jersey 08055 (609) 654–1104
4950 York Road – Suite 2C
Holicong, Pennsylvania 18928–031
(267) 544–0508

PRIME:
ATM — APPLIED TECHNOLOGY & MANAGEMENT
Applied Technology & Management, Inc.
411 Pablo Avenue
Jacksonville Beach, FL 32250
O: 904–249–8000
www.appliedtm.com
Coastal, Environmental, Marine, and Water Resource Engineering

CIVIL:
Cairone & Kaupp, Inc.
Landscape Architecture
Civil Engineering
1118 East Columbia Avenue
Philadelphia, PA 19125 4206
Phone: 215 291 2800
Fax: 215 291 2804
www.caironekaupp.com

Drawing Title:

EROSION & SEDIMENT CONTROL PLAN STAGE 4

Project No.: 1220	Drawing No.: C502
Drawn By: RMB	
Approved By: JAM	
Scale: 1" = 20'	
Date: 28MAR14	Sheet 14 of 15

P:\2012\1220–usvi marina\Cad\Current\1220C–C500.dwg | Jun 23, 2014 – 1:37pm | JMina || Cairone & Kaupp, Inc.

EROSION & SEDIMENT POLLUTION CONTROL BMP'S

NO MORE THAN 4 ACRES TOTAL WILL BE DISTURBED DURING SITE DEVELOPMENT. THE FOLLOWING MEASURES SHALL BE IMPLEMENTED TO MINIMIZE EROSION AND SEDIMENTATION POLLUTION CREATED BY SITE CONSTRUCTION:

LIMITED AREA OF DISTURBANCE
NO SITE CLEARING OR GRADING IS PROPOSED WHICH IS NOT ESSENTIAL TO THE IMMEDIATE PHASE OF CONSTRUCTION OF THE PROJECT WILL OCCUR. IN GENERAL, WORK WILL PROCEED ON A PARCEL BY PARCEL SERIES IN ACCORDANCE WITH THE DETAILED SEQUENCE OF CONSTRUCTION PROVIDED ON THE PLANS. AREAS OF VEGETATION TO REMAIN UNDISTURBED WILL BE PROTECTED BY TREE PROTECTION FENCING.

STABILIZED CONSTRUCTION ENTRANCE
TEMPORARY CONSTRUCTION ENTRANCES WILL BE PROVIDED FOR EACH STAGE OF WORK AT APPROPRIATE LOCATIONS TO ALLOW ACCESS FOR CONSTRUCTION VEHICLES TO ENTER THE SITE. THE ENTRANCES WILL AID IN CLEANING MUD AND DIRT FROM VEHICLE TIRES BEFORE EXITING THE SITE.

SILT FENCE & COMPOST SILT SOCK
SILT FENCE AND COMPOST SILT SOCK WILL BE USED TO FILTER SEDIMENT FROM SMALL OVERLAND (SHEET) FLOW AREAS AND ALONG THE TOE OF SLOPE OF SOIL STOCKPILES. ROCK FILTER OUTLETS WILL BE USED IN THOSE AREAS WHERE THE SILT FENCE MAY BECOME INEFFECTIVE.

TEMPORARY TOPSOIL STOCKPILES
TEMPORARY TOPSOIL STOCKPILES WILL BE PROVIDED FOR TO PROTECT AVAILABLE TOPSOIL AND REDISTRIBUTE IT ONSITE WHERE POSSIBLE . STOCKPILES SHALL BE PROTECTED WITH TEMPORARY SEEDING AND BE PROVIDED WITH SILT FENCE OR COMPOST SILT SOCK ALONG THE DOWNSTREAM PERIMETER. STOCKPILES SHALL BE NO GREATER THAN 35' HIGH WITH SIDE SLOPES OF 2:1 MAX.

SEDIMENTATION BASIN
THE SEDIMENT BASIN IS A TEMPORARY STRUCTURE TO BE IN PLACE DURING THE PERIOD OF EARTH DISTURBANCE. FOLLOWING THE STABILIZATION OF THE SITE, THE SEDIMENT BASIN WILL BE ALTERED TO FUNCTION AS PERMANENT STORMWATER DETENTION BASIN STRUCTURES. A TEMPORARY OUTLET WILL BE INSTALLED TO PROVIDE SEDIMENT STORAGE AND DEWATERING TIME.

PIPE OUTLET PROTECTION
RIP-RAP APRON PROTECTION WILL BE PROVIDED AT THE OUTFALL OF ALL TEMPORARY AND PERMANENT OUTLET PIPES.

TEMPORARY SEEDING AND MULCHING
DISTURBED AREAS SHALL RECEIVE A TEMPORARY SEED MIXTURE AND MULCH AS SHOWN ON THE PLANS. IN ADDITION, SOIL STOCKPILE AREAS AND SEDIMENT BASINS/TRAPS ARE TO BE SEEDED AND MULCHED WITH A TEMPORARY SEED MIXTURE TO PROMOTE RAPID VEGETATED STABILIZATION.

PERMANENT SEEDING AND MULCHING
IMMEDIATELY AFTER FINAL GRADING IS COMPLETED, ALL DISTURBED AREAS WILL BE PERMANENTLY STABILIZED WITH A PERMANENT SEED MIXTURE AND MULCH.

EROSION & SEDIMENT CONTROL NOTES

ALL EROSION AND SEDIMENT CONTROL MEASURES SHALL BE CONSTRUCTED AND MAINTAINED ACCORDING TO THE STANDARDS AND SPECIFICATIONS OF THE DEPARTMENT OF PLANNING AND NATURAL RESOURCES. UNTIL THE SITE IS STABILIZED, ALL EROSION AND SEDIMENTATION CONTROLS MUST BE MAINTAINED PROPERLY. MAINTENANCE MUST INCLUDE INSPECTIONS OF ALL EROSION AND SEDIMENTATION CONTROLS AFTER EACH RUNOFF EVENT AND ON A WEEKLY BASIS. ALL PREVENTATIVE AND REMEDIAL MAINTENANCE WORK, INCLUDING CLEAN OUT, REPAIR, REPLACEMENT, REGRADING, RESEEDING, REMULCHING, AND RENETTING, MUST BE PERFORMED IMMEDIATELY.

2. NO WORK SHALL COMMENCE UNTIL PERMITS FOR SOIL DISTURBANCE HAVE BEEN OBTAINED. THE TPDES PERMITTEE/CONTRACTOR SHALL NOTIFY THE DEPARTMENT OF PLANNING AND NATURAL RESOURCES OF THE DATE OF THE PRE-CONSTRUCTION MEETING.
3. PRIOR TO PERMANENT SEEDING SOILS TESTING SHALL BE PERFORMED TO DETERMINE THE APPROPRIATE FERTILIZER AND OTHER AMENDMENT APPLICATIONS. FERTILIZER AND OTHER AMENDMENTS SHALL BE APPLIED PER THE RECOMMENDATIONS OF A LICENSED LANDSCAPE PROFESSIONAL. PERMANENT VEGETATION SHOULD BE ESTABLISHED AT THE EARLIEST POSSIBLE DATE. WATERING, MOWING AND FERTILIZING PROGRAMS SHALL BE CONTINUED UNTIL VEGETATIVE COVER IS ADEQUATELY ESTABLISHED AND AS REQUIRED ON A PERMANENT BASIS TO MAINTAIN THE COVER.
4. STRAW MULCH OR HAY MULCH AT THE RATE OF 3.0 TONS/ACRES SHOULD BE APPLIED IN CONJUNCTION WITH ALL TEMPORARY AND PERMANENT SEEDING ACTIVITIES. MULCH SHALL BE APPLIED IMMEDIATELY AFTER SEEDING. HYDROSEEDING MAY BE USED IN LIEU OF MULCHING. ADEQUATE PROTECTIOJN SHALL BE PROVIDED (TEMPORARY TREE PROTECTION OR CONSTRUCTION SECURITY FENCE) SHALL BE PROVIDED TO KEEP LIVESTOCK FROM DISTURBING NEWLY PLANTED AND MULCHED AREAS.
5. IF SOD IS APPLIED, THE FOLLOWING REQUIREMENTS SHALL APPLY:
   a. THE SUBSOIL SHALL BE LIGHTLY IRRIGATED IMMEDIATELY PRIOR TO LAYING THE SOD.
   b. PLANT SOD OR PLUGS ON 12" CENTERS. USE SOD STRIPS ON ERODIBLE SLOPES AND OTHER CRITICAL AREAS.
   b. LAY SOD ALONG THE CONTOUR, STARTING AT THE BOTTOM OF THE SLOPE AND WORKING UP.
   c. PLACE SOD STRIPS WITH SNUG, EVEN JOINTS AND STAGGER THE JOINTS FROM STRIP TO STRIP TO PROMOTE MORE UNIFORM GROWTH AND STRENGTH. THE FIRST ROW OF SOD SHALL BE LAID IN A STRAIGHT LINE WITH SUBSEQUENT ROWS PLACED PARALLEL TO AND TIGHTLY WEDGED AGAINST EACH OTHER.
   d. ROLL OR TAMP SOD IMMEDIATELY FOLLOWING PLACEMENT TO ENSURE THAT THE ROOTS ARE IN SOLID CONTACT WITH THE SOIL SURFACE. DO NOT OVERLAP SOD. ALL JOINTS SHOULD BE BUTTED TIGHT TO PREVENT VOIDS THAT WOULD CAUSE AIR DRYING OF THE ROOTS.
   e. ON STEEP SLOPES, SECURE SOD TO SURFACE SOIL WITH WOODEN PEGS OR WIRE STAPLES.
   f. IMMEDIATELY FOLLOWING PLANTING, WATER SOD UNTIL MOISTURE PENETRATES THE SOIL LAYER BENEATH THE SOD. MAINTAIN OPTIMUM MOISTURE FOR AT LEAST 2 WEEKS. WATERING TO A 6" DEPTH IS MORE EFFECTIVE THAN FREQUENT LIGHT WATERING. AFTER THE FIRST 2 WEEKS, SOD WATERING IS REQUIRED AS NECESSARY TO MAINTAIN ADEQUATE MOISTURE CONTENT.
6. ANY DISTURBED AREA ON WHICH ACTIVITY HAS CEASED AND WHICH WILL REMAIN EXPOSED MUST BE STABILIZED IMMEDIATELY. DURING NON-GERMINATING PERIODS, MULCH MUST BE APPLIED AT THE RECOMMENDED RATES. DISTURBED AREAS WHICH ARE NOT AT FINISHED GRADE AND WHICH WILL BE REDISTURBED WITHIN 6 YEAR MAY BE STABILIZED IN ACCORDANCE WITH TEMPORARY SEEDING SPECIFICATIONS. DISTURBED AREAS WHICH ARE EITHER AT FINISHED GRADE, OR WILL NOT BE REDISTURBED WITHIN 1 YEAR MUST BE STABILIZED IN ACCORDANCE WITH PERMANENT SEEDING SPECIFICATIONS.
7. DIVERSIONS, CHANNELS, SEDIMENT BASINS, SEDIMENT TRAPS, AND STOCKPILES MUST BE STABILIZED IMMEDIATELY.
8. ALL EROSION AND SEDIMENTATION POLLUTION CONTROL MEASURES MUST BE STRUCTURALLY SOUND, AND PROTECTED FROM UNAUTHORIZED ACTS OF THIRD PARTIES.
9. TEMPORARY EROSION AND SEDIMENTATION POLLUTION CONTROL MEASURES, IN ADDITION TO THOSE SHOWN ON THIS PLAN, SHALL BE PROVIDED BY THE PERMITTEE/CONTRACTOR IF THERE IS EVIDENCE OF SILT, SEDIMENT AND/OR MUD LEAVING THE SITE DURING CONSTRUCTION.
10. THE PERMITTEE/CONTRACTOR MUST DEVELOP, AND HAVE APPROVED BY THE DPNR, A SEPARATE EROSION AND SEDIMENTATION POLLUTION CONTROL PLAN FOR EACH SPOIL, BORROW, OR OTHER WORK AREA NOT DETAILED IN THE PERMITTED PLAN, WHETHER LOCATED WITHIN OR OUTSIDE OF THE CONSTRUCTION LIMITS.
11. THE PERMITTEE/CONTRACTOR WILL BE RESPONSIBLE FOR THE PROPER CONSTRUCTION, STABILIZATION, AND MAINTENANCE OF ALL TEMPORARY AND PERMANENT EROSION AND SEDIMENTATION CONTROLS.
12. UTILITY LINE TRENCH EXCAVATION REQUIREMENTS:
   a. LIMIT ADVANCE CLEARING AND GRUBBING OPERATIONS TO A DISTANCE EQUAL TO TWO TIMES THE LENGTH OF PIPE INSTALLATION THAT CAN BE COMPLETED IN ONE DAY.
   b. LIMIT DAILY TRENCH EXCAVATION TO THE LENGTH OF PIPE PLACEMENT, PLUG INSTALLATION AND BACKFILLING THAT CAN BE COMPLETED THE SAME DAY. DAILY BACKFILLING OF THE TRENCH MAY BE DELAYED FOR A MAXIMUM OF SIX DAYS FOR CERTAIN CASES REQUIRING TESTING OF THE INSTALLED PIPE.
   c. WATER THAT ACCUMULATES IN THE OPEN TRENCH WILL BE COMPLETELY REMOVED BY PUMPING TO A FACILITY FOR REMOVAL OF SEDIMENT BEFORE PIPE PLACEMENT AND / OR BACKFILLING BEGINS.
   d. ON THE DAY FOLLOWING PIPE PLACEMENT AND TRENCH BACKFILLING, THE DISTURBED AREA WILL BE GRADED TO FINAL CONTOURS AND APPROPRIATE TEMPORARY EROSION AND SEDIMENT POLLUTION CONTROL MEASURES / FACILITIES WILL BE INSTALLED. SEEDING AND MULCHING OF ALL DISTURBED AREAS WILL BE DONE AT THE END OF EACH WEEK OR WITHIN THE NEXT TWO CALENDAR DAYS IF DAILY BACKFILLING HAS BEEN DELAYED.
13. STORMWATER INLETS WHICH DO NOT DISCHARGE TO A SEDIMENT BASIN MUST BE PROTECTED UNTIL THEIR DRAINAGE AREA IS STABILIZED.
14. LIMIT OF DISTURBANCE APPROXIMATELY EQUAL TO A MINIMUM OF 3' INSIDE OF PROPERTY LINE.
15. UNLESS OTHERWISE SHOWN ON THE PLANS, THE EROSION CONTROL BLANKET USED FOR STABILIZATION SHALL AT A MINIMUM BE EASTCOAST EROSION BLANKET ECC-2 DOUBLE NET COCONUT ROLLED EROSION CONTROL PRODUCT (OR APPROVED EQUAL). THE BLANKET SHALL BE INSTALLED PER THE MANUFACTURERS SPECIFICATIONS. SEE DETAILS FOR ADDITIONAL EROSION CONTROL BLANKET SPECIFICATIONS.
16. THE EROSION AND SEDIMENT POLLUTION CONTROL MEASURES SHOWN ON THIS PLAN HAVE BEEN PREPARED IN ACCORDANCE WITH REQUIREMENTS OF THE DPNR. CAIRONE & KAUPP, INC. DOES NOT TAKE RESPONSIBILITY IN OBSERVING AND CERTIFYING THE CONSTRUCTION OF THESE FACILITIES UNLESS REQUESTED SPECIFICALLY BY THE OWNER AND/OR CONTRACTOR. THEREFORE, CAIRONE & KAUPP, INC DOES NOT ACCEPT ANY RESPONSIBILITY FOR DAMAGES AS A RESULT OF IMPROPER CONSTRUCTION AND/OR MAINTENANCE OF FACILITIES DURING CONSTRUCTION.

SEEDING SPECIFICATIONS

1. TEMPORARY SHALL BE PERFORMED ON ALL DISTURBED SOIL AREAS IN WHICH ACTIVITIES HAVE CEASED AND WHICH WILL REMAIN EXPOSED. MINIMUM SPECIFICATIONS ARE AS FOLLOWS, REFER TO THE LANDSCAPE PLAN AND CONSULT WITH A LOCAL LANDSCAPE PROFESSIONAL FOR APPROPRIATE SUBSTITUTIONS OR FOR ADDITIONAL SEEDING SPECIFICATIONS:
2. ON RELATIVELY LEVEL, UN-GRADED AREAS WHERE THE SOIL IS UNSUITABLE FOR GROWING VEGETATION, SPREAD A 2"-6" LAYER OF GOOD TOPSOIL BEFORE PLANTING. REFER TO TABLE 3, SEDIMENT & EROSION CONTROL ON CONSTRUCTION SITES FIELD GUIDE, BY DPNR & THE UNIVERSITY OF THE VIRGIN ISLANDS.
3. USE ANNUAL GRASSES (SUCH AS RYE OR FESCUE) TO PROVIDE TEMPORARY COVER. COMMON BERMUDA OR BAHIA GRASS (OR OTHER PERENNIALS, SEE TABLE 4, IBID) CAN ALSO BE ADDED TO THE SEED MIX TO PROVIDE LONGER-TERM STABILIZATION ON BARE SOILS THAT WILL BE REDISTURBED BEFORE CONSTRUCTION IS COMPLETE, BUT NOT FOR A CONSIDERABLE AMOUNT OF TIME.
4. PLANT GRASSES DURING THE RAINY SEASON, IF POSSIBLE, AND ACCORDING TO MANUFACTURER'S SPECIFICATIONS. SUPPLEMENTAL WATER WILL BE NEEDED IF GRASS IS PLANTED DURING DRY SEASON. IT MAY ALSO BE NECESSARY TO INCREASE THE SEED RATE TO ACCOUNT FOR LOSS TO BIRDS AND PESTS.
5. REPAIR SMALL BARE SPOTS AS NEEDED BY RESEEDING AND/OR MULCHING.
6. MOW GRASSED SWALES AND EMBANKMENTS FREQUENTLY TO CONTROL WEEDS AND UNWANTED WOODY VEGETATION. MOWING HEIGHT SHOULD BE AT LEAST 3" ABOVE GROUND.
7. PERMANENT SEEDING SHALL BE PERFORMED ON ALL DISTURBED SOIL AREAS THAT ARE AT FINISHED GRADE, AND ALL DISTURBED SOIL AREAS THAT WILL NOT BE DISTURBED WITHIN ONE YEAR. MINIMUM SPECIFICATIONS ARE AS FOLLOWS, REFER TO THE LANDSCAPE PLAN AND CONSULT WITH A LOCAL LANDSCAPE PROFESSIONAL FOR APPROPRIATE SUBSTITUTIONS OR FOR ADDITIONAL SEEDING SPECIFICATIONS:
   a. INSTALLATION SPECIFICATIONS FOR PERMANENT SEEDING AND PLANTING ARE SIMILAR TO THOSE FOR TEMPORARY SEEDING. ESTABLISH PERMANENT GRASS OR OTHER VEGETATION BY SEEDING, SODDING OR PLANTING IMMEDIATELY AFTER SEEDBED PREPARATION IS COMPLETED. SEE TABLE 8 (SEDIMENT & EROSION CONTROL ON CONSTRUCTION SITES FIELD GUIDE, BY DPNR & THE UNIVERSITY OF THE VIRGIN ISLANDS) FOR INFORMATION ON LAWN GRASSES APPROPRIATE FOR USE IN THE VIRGIN ISLANDS. CONTACT THE UVI COOPERATIVE EXTENSION SERVICE FOR INFORMATION ON NATIVE PLANTS AND OTHER SUITABLE VEGETATION.
   b. APPLY GRASS SEED UNIFORMLY BY HAND, SEEDER, OR HYDROSEEDER. IF SEEDING ON STEEP (>15%) SLOPES OR DURING THE RAINY SEASON, PROTECT THE GRASS SEED, PLANTS AND SOIL WITH MULCH OR EROSION CONTROL BLANKET.
   c. REPAIR SMALL BARE SPOTS BY RE-SEEDING AND/OR MULCHING.
   d. MOW GRASS FREQUENTLY TO CONTROL WEEDS. MOWING HEIGHT SHOULD BE AT LEAST 2" ABOVE GROUND. (HEIGHT SHOULD BE HIGHER DURING THE DRY SEASON AND DROUGHT AND WITHIN THE GHUT AND SWM BASIN AREAS AREAS).
   e. NEW VEGETATION MAY NEED TO BE FERTILIZED FOR THE FIRST 2 OR 3 YEARS AFTER PLANTING TO MAINTAIN DENSITY AND IMPROVE VIGOR. FERTILIZE ACCORDING TO SOIL TEST RESULTS.
   f. USE HERBICIDES AS DIRECTED BY MANUFACTURER AND ACCORDING TO TERRITORIAL AND FEDERAL RULES AND REGULATIONS (CONTACT DPNR-DEP OR UVI COOPERATIVE EXTENSION SERVICE FOR DETAILS).
8. PRIOR TO PERMANENT SEEDING SOILS TESTING SHALL BE PERFORMED TO DETERMINE THE APPROPRIATE FERTILIZER AND SOIL AMENDMENT APPLICATIONS. FERTILIZER AND AMENDMENTS SHALL BE APPLIED PER THE RECOMMENDATIONS OF A LICENSED LANDSCAPE PROFESSIONAL. PERMANENT VEGETATION SHOULD BE ESTABLISHED AT THE EARLIEST POSSIBLE DATE. WATERING, MOWING AND FERTILIZING PROGRAMS SHALL BE CONTINUED UNTIL VEGETATIVE COVER IS ADEQUATELY ESTABLISHED.

MAINTENANCE OF E&S CONTROL FACILITIES

ALL EROSION AND SEDIMENT POLLUTION CONTROL DEVICES AND FACILITIES SHALL BE PROPERLY MAINTAINED AND INSPECTED ON A REGULAR BASIS TO ENSURE FUNCTIONALITY. REFER TO PLANS FOR DETAILS FOR MAINTENANCE. IN GENERAL, ALL DEVICES MUST BE INSPECTED WEEKLY AND IF NEEDED, REPAIRED. INSPECTIONS AND REPAIRS (IF NEEDED) SHOULD ALSO BE PERFORMED AFTER EVERY STORM EVENT TO ENSURE CONTINUED PROTECTION. PRIOR TO LARGER PREDICTED STORM EVENTS, INSPECTION AND REPAIR (IF NEEDED) SHALL BE PERFORMED BEFORE THE STORM.

METHOD OF LAND CLEARING

LAND CLEARING REQUIRED IS MINIMAL, AS THE PROPERTIES ARE CURRENTLY PRIMARILY CLEARED. LIMITED AREAS OF CLEARING WILL BE REQUIRED. WITHIN THESE AREAS, CLEARING SHALL BE PERFORMED BY CUTTING VEGETATION PRIOR TO REMOVING ROOTMASSES. NO CLEARING SHALL BE PERFORMED BY RIPPING VEGETATION OUT OF THE GROUND WITH ROOTMASS IN TACT. ALL REMOVED MATERIALS SHALL BE CHIPPED AND MULCHED ON-SITE AND UTILIZED EITHER IN EROSION CONTROL FACILITIES AND DEVICES, OR MIXED INTO THE TOPSOIL IN LANDSCAPED AREAS SOIL TO PROVIDE ADDITIONAL ORGANICS FOR THE PLANTINGS.

PROVISIONS TO PRESERVE TOPSOIL AND LIMIT SITE DISTURBANCE

PRIOR TO CONSTRUCTION ANY TOPSOIL FOUND ON THE SITE WILL BE REMOVED AND STOCKPILED, PROTECTED WITH TEMPORARY PLANTINGS AND SILT FENCE OR OTHER EROSION PROTECTION TECHNIQUES (PER THE PLANS PROVIDED) AND UPON COMPLETION OF THE PROJECT WILL BE RE-DISTRIBUTED WITHIN THE LANDSCAPED AREAS OF THE SITE. SHOULD THERE BE EXCESS TOPSOIL, THE REMAINING MATERIAL WILL BE MOVED TO OTHER LOCATIONS WITHIN THE CORAL BAY COMMUNITY TO SUPPLEMENT LANDSCAPED AREAS ON OTHER SITES WITHIN CORAL BAY.

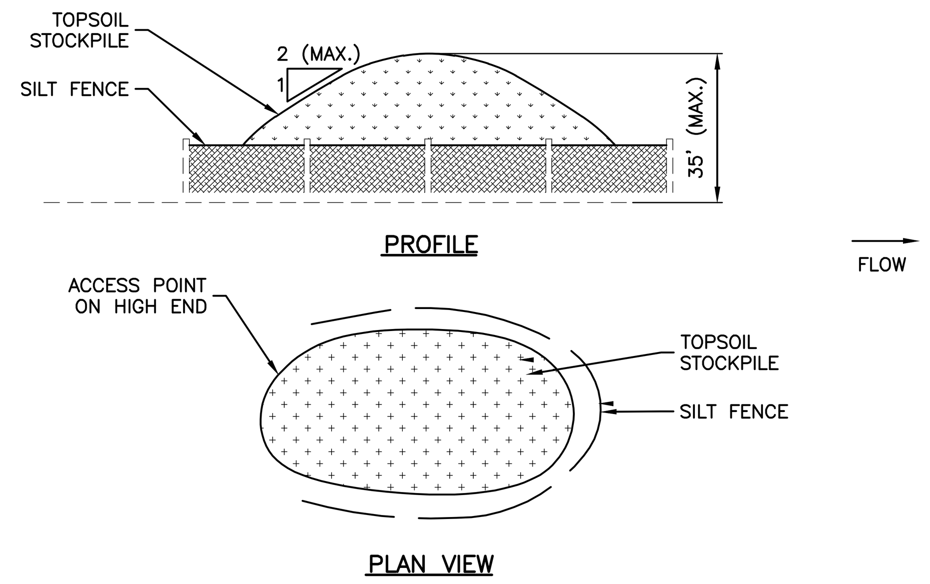

NOTES
1. SILT FENCE MUST BE PLACED AROUND THE PERIMETER OF ALL STOCKPILES.
2. IMMEDIATELY APPLY TEMPORARY SEEDING TO ALL STOCKPILES WHICH WILL BE IN PLACE FOR 20 DAYS OR MORE.

3 / C510 TOPSOIL STOCKPILE AREA
NOT TO SCALE

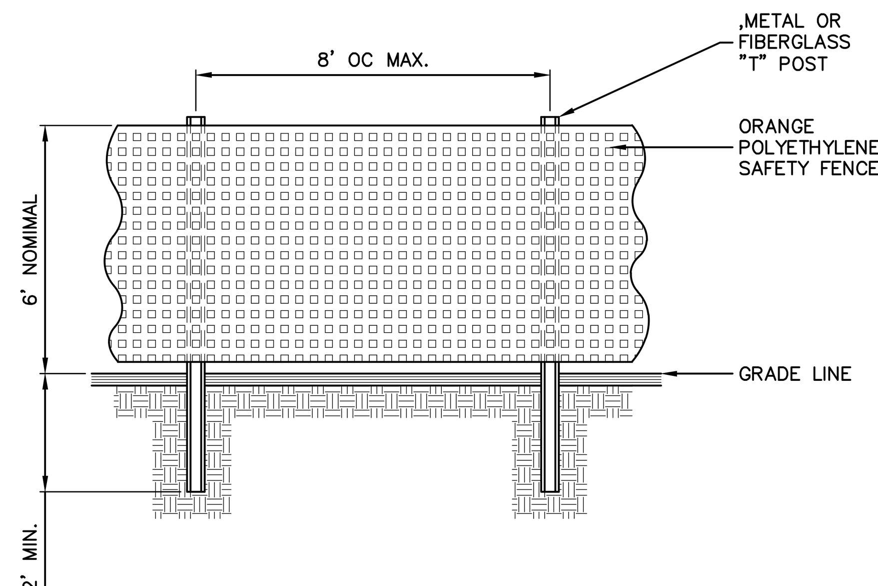

8 / C510 CONSTRUCTION FENCE
NOT TO SCALE

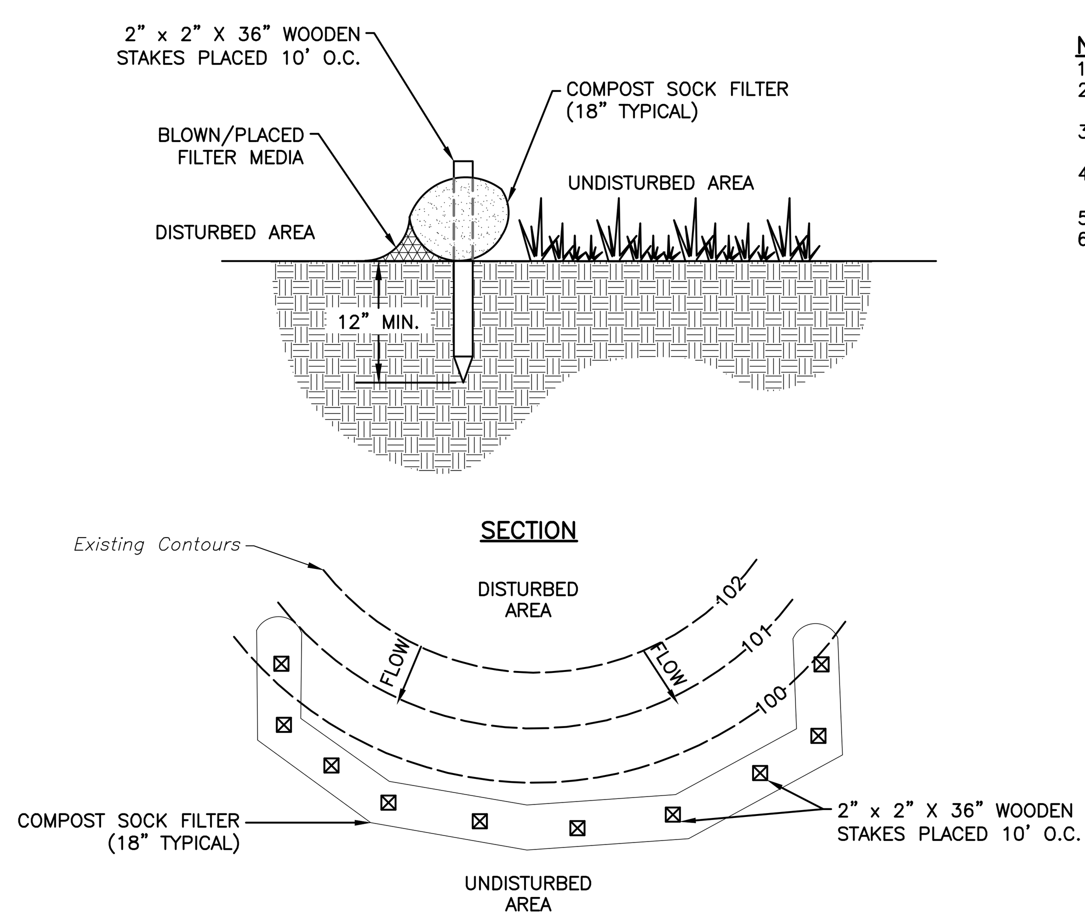

NOTES
1. SOCK MAY BE SUBSTITUTED FOR FILTER FABRIC FENCE WITH APPROVAL BY THE DESIGN ENGINEER.
2. SOCK FABRIC SHALL COMPLY WITH REQUIREMENTS LISTED IN PADEP "EROSION AND SEDIMENT POLLUTION CONTROL PROGRAM MANUAL" DATED MARCH 2012, TABLE 4.1.
3. COMPOST SHALL COMPLY WITH REQUIREMENTS LISTED IN PADEP "EROSION AND SEDIMENT POLLUTION CONTROL PROGRAM MANUAL" DATED MARCH 2012, TABLE 4.2.
4. COMPOST FILTER SOCK SHALL BE PLACED AT EXISTING LEVEL GRADE. BOTH ENDS OF THE SOCK SHALL BE EXTENDED AT LEAST 8 FEET UP SLOPE AT 45 DEGREES TO THE MAIN SOCK ALIGNMENT. MAXIMUM SLOPE LENGTH ABOVE ANY SOCK SHALL NOT EXCEED LENGTHS LISTED IN PADEP "EROSION AND SEDIMENT POLLUTION CONTROL PROGRAM MANUAL" DATED MARCH 2012, FIGURE 4.2. STAKES MAY BE INSTALLED IMMEDIATELY DOWNSLOPE OF THE SOCK IF SO SPECIFIED BY THE MANUFACTURER.
5. TRAFFIC SHALL NOT BE PERMITTED TO CROSS FILTER SOCKS.
6. ACCUMULATED SEDIMENT SHALL BE REMOVED WHEN IT REACHES HALF THE ABOVEGROUND HEIGHT OF THE SOCK AND DISPOSED OFF AS INDICATED.
7. UPON STABILIZATION OF THE AREA TRIBUTARY TO THE SOCK, STAKES SHALL BE REMOVED. THE SOCK MAY BE LEFT IN PLACE AND VEGETATED OR REMOVED. IN THE LATTER CASE, THE MESH SHALL BE CUT OPEN AND THE MULCH SPREAD AS A SOIL SUPPLEMENT.

MAINTENANCE NOTES
1. SOCKS SHALL BE INSPECTED WEEKLY AND AFTER EACH RUNOFF EVENT. DAMAGED SOCKS SHALL BE REPAIRED ACCORDING TO MANUFACTURER'S SPECIFICATIONS OR REPLACED WITHIN 24 HOURS OF INSPECTION.
2. BIODEGRADABLE FILTER SOCKS SHALL BE REPLACED AFTER 6 MONTHS, PHOTODEGRADABLE SOCKS AFTER 1 YEAR. POLYPROPYLENE SOCKS SHALL BE REPLACED ACCORDING TO MANUFACTURER'S RECOMMENDATIONS.

22 / C510 COMPOST FILTER SOCK
NOT TO SCALE

FLOW

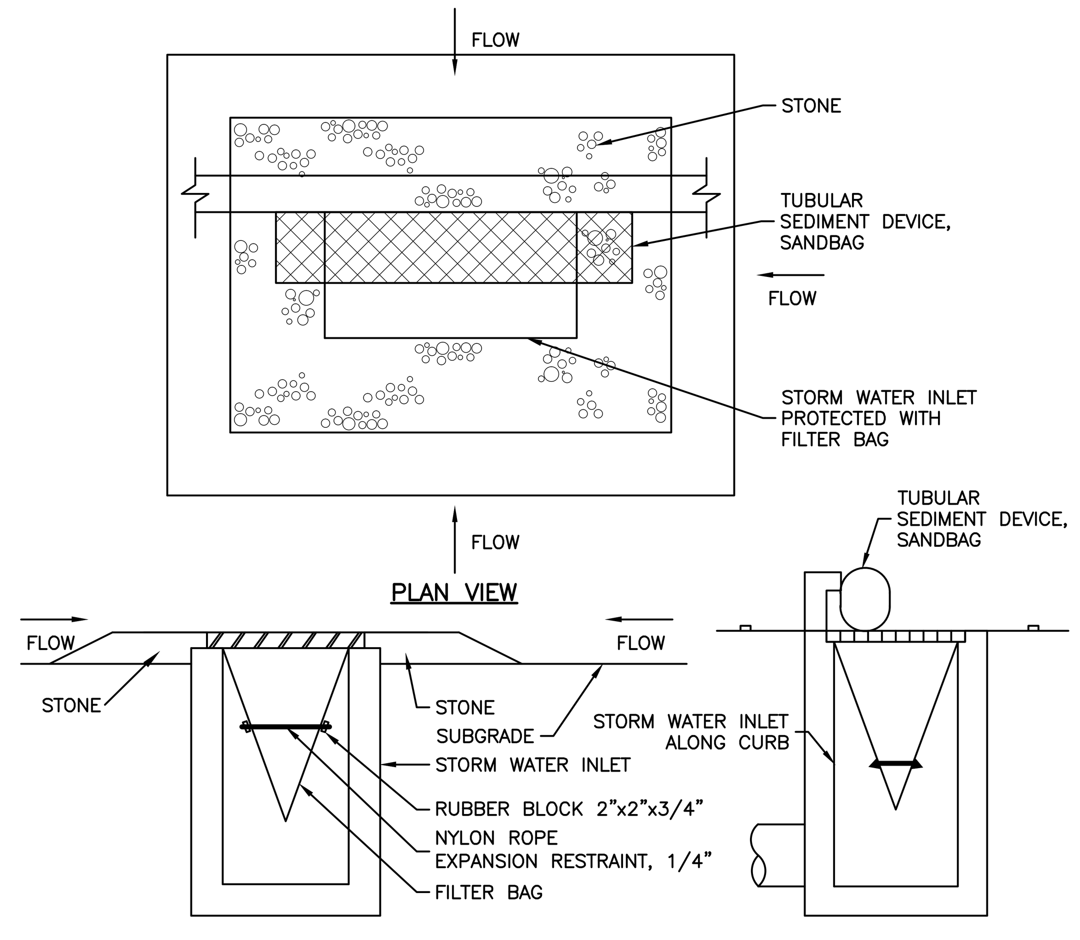

NOTES
1. INSTALL A TUBULAR SEDIMENT CONTORL DEVICE IN ADDITION TO THE FILTER BAG ON ALL CURB INLETS.

4 / C510 INLET PROTECTION
NOT TO SCALE

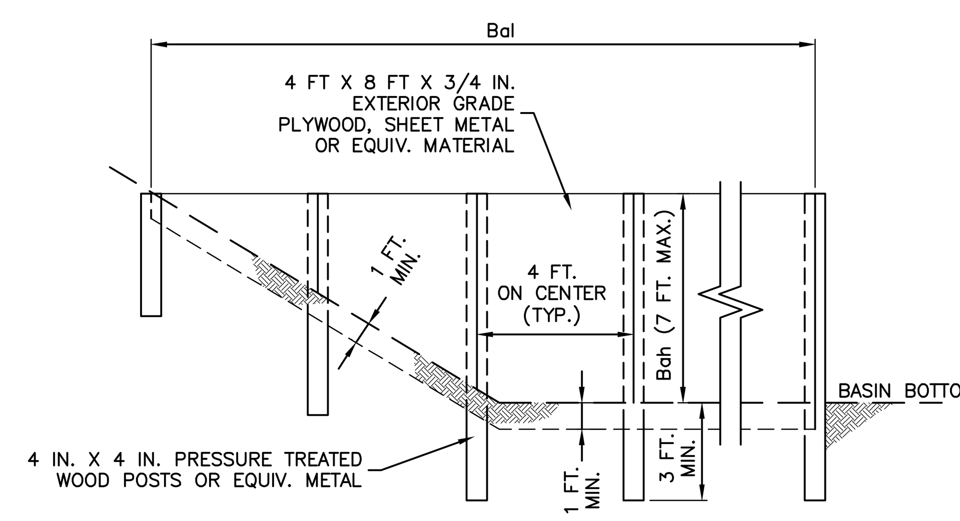

NOTES
1. SEE APPROPRIATE BASIN DETAIL FOR PROPER LOCATION AND ORIENTATION.
2. AN ACCEPTABLE ALTERNATIVE IS TO INSTALL A SUPER SILT FENCE AT THE BAFFLE LOCATION.
3. BAFFLES SHALL BE TIED INTO ONE SIDE OF THE BASIN UNLESS OTHERWISE SHOWN ON THE PLAN DRAWINGS.
4. SUBSTITUTION OF MATERIALS NOT SPECIFIED IN THIS DETAIL SHALL BE APPROVED BY CZM/DPNR BEFORE INSTALLATION.
5. DAMAGED OR WARPED BAFFLES SHALL BE REPLACED WITHIN 7 DAYS OF INSPECTION.
6. BAFFLES REQUIRING SUPPORT POSTS SHALL NOT BE INSTALLED IN BASINS REQUIRING IMPERVIOUS LINERS.

6 / C510 BAFFLE
NOT TO SCALE

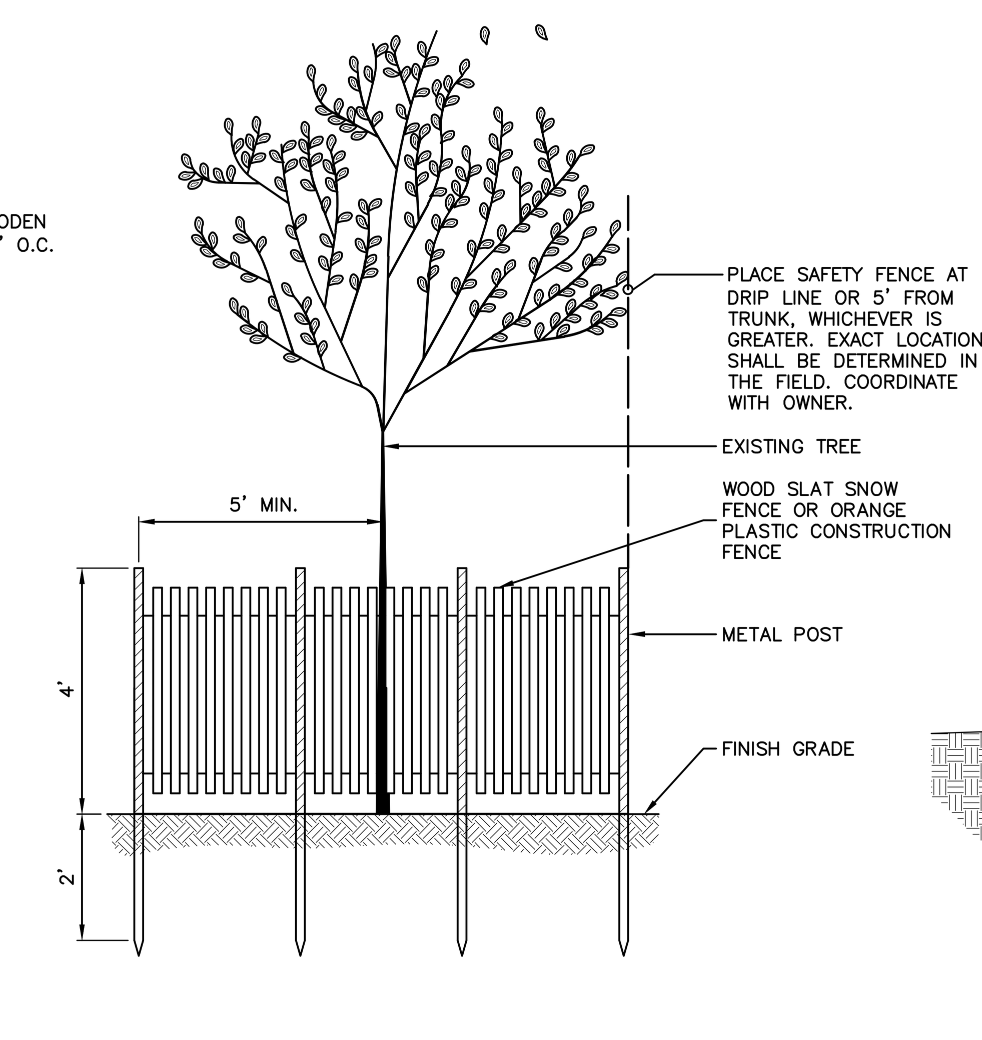

5 / C510 TREE PROTECTION FENCE
NOT TO SCALE

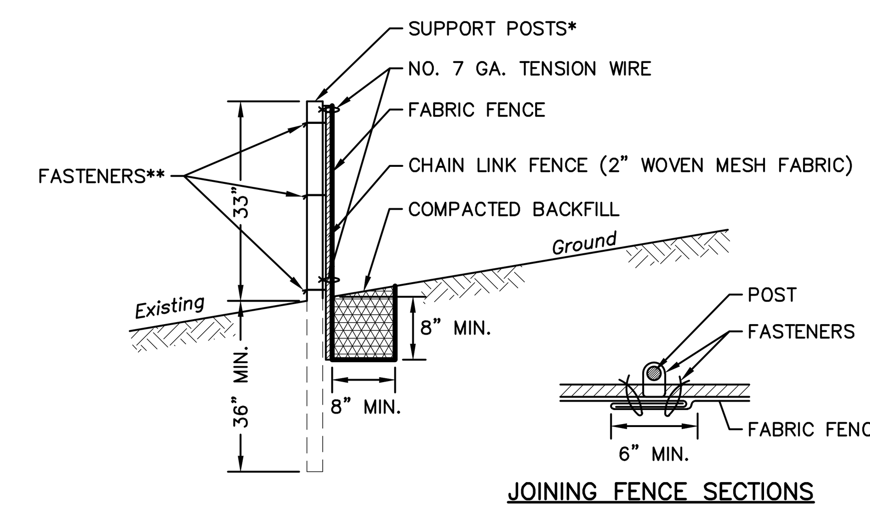

NOTES
1. NO. 7 GA. TENSION WIRE INSTALLED HORIZONTALLY AT TOP AND BOTTOM OF CHAIN-LINK FENCE.
2. FILTER FABRIC FENCE MUST BE PLACED AT EXISTING LEVEL GRADE. BOTH ENDS OF THE BARRIER MUST BE EXTENDED AT LEAST 8 FEET UPSLOPE AT 45 DEGREES TO THE MAIN BARRIER ALIGNMENT.
3. SEDIMENT MUST BE REMOVED WHEN ACCUMULATIONS REACH 1/2 THE ABOVE GROUND HEIGHT OF THE FENCE.

* POSTS SPACED @ 10' MAX. USE 2 1/2" DIA. GALVANIZED OR ALUMINUM POSTS.
** CHAIN LINK TO POST FASTENERS SPACED @ 14" MAX. USE NO. 6 GA. ALUMINUM WIRE OR NO. 9 GALVANIZED STEEL PRE-FORMED CLIPS. CHAIN LINK TO TENSION WIRE FASTENERS SPACED @ 60" MAX. USE NO. 10 GA. GALVANIZED STEEL WIRE. FABRIC TO CHAIN FASTENERS SPACED @ 24" MAX. C TO C.

2 / C510 SUPER FILTER FABRIC FENCE
NOT TO SCALE

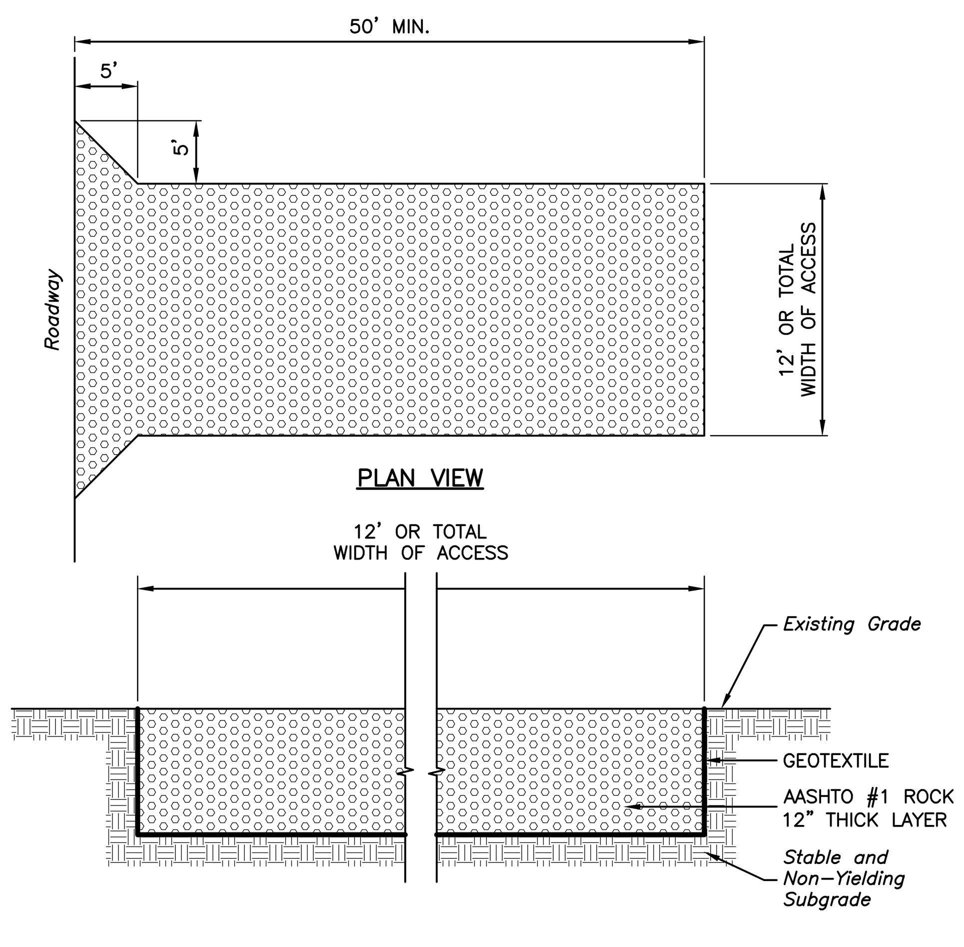

MAINTENANCE NOTE
ROCK CONSTRUCTION ENTRANCE THICKNESS SHALL BE CONSTANTLY MAINTAINED TO THE SPECIFIED DIMENSIONS BY ADDING ROCK. A STOCKPILE SHALL BE MAINTAINED ON SITE FOR THIS PURPOSE. AT THE END OF EACH CONSTRUCTION DAY, ALL SEDIMENT DEPOSITED ON PAVED ROADWAYS SHALL BE REMOVED AND RETURNED TO THE CONSTRUCTION SITE.

1 / C510 ROCK CONSTRUCTION ENTRANCE
NOT TO SCALE

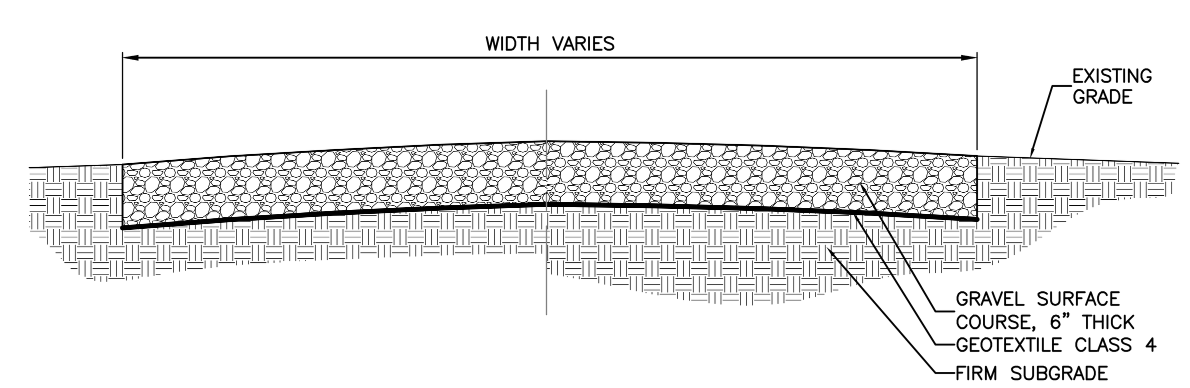

7 / C510 TEMPORARY LAYDOWN AREA
NOT TO SCALE

YACHT CLUB AT SUMMER'S END
CORAL BAY, ST. JOHN, USVI
Prepared for:
The Summer's End Group, LLC
5000 Estate Enighed, Suite 63
St. John, USVI 00830
340.777.9075

SEAL:
PROFESSIONAL ENGINEER
JOSEPH A. MINA
1049E
VIRGIN ISLANDS

Documents prepared by Cairone & Kaupp, Incorporated are instruments of service for use solely with respect to this Project and unless otherwise provided, Cairone & Kaupp, Incorporated shall be deemed the author of these documents and shall retain all common law, statutory and other reserved rights, including the copyright. They are not intended or represented to be suitable for reuse by Owner or others on extension of the Project or on any other project. Any reuse without written verification or adoption by Cairone & Kaupp, Incorporated will be at Owner's sole risk and without liability or legal exposure to Cairone & Kaupp, Incorporated; and Owner shall indemnify and hold harmless Cairone & Kaupp, Incorporated from all claims, damages, losses and expenses including attorney's fees arising out of or resulting therefrom.

Date	No.	Revision	By
06-23-14	1	FINAL CZM SUBMISSION	JAM

ENVIRONMENTAL:
Bioimpact, Inc.
P.O. Box 132 Kingshill
St. Croix, U.S. Virgin Islands 00851
340 690-8445 Fax 340 718-3800
bioimpact.islands.vi@gmail.com

SURVEY:
MARVIN BERNING & ASSOCIATES
LAND SURVEYORS SUBDIVISION PLANNING PROPERTY SURVEYS
6501 Red Hook Plaza, Suite 201,
Saint Thomas,VI 00802-1306
340-775-6557 email: hgvisurvey@gmail.com

TRAFFIC:
HCA Homer & Carter Associates A PROFESSIONAL CORPORATION
TRANSPORTATION AND TRAFFIC ENGINEERING
105 Atsion Road – Suite F
Medford, New Jersey 08055
(609) 654-4104
4950 York Road – Suite 2C
Holicong, Pennsylvania 18928-031
(267) 544-0508

PRIME:
APPLIED TECHNOLOGY & MANAGEMENT
Applied Technology & Management, Inc.
411 Pablo Avenue
Jacksonville Beach, FL 32250
O: 904-249-8009
www.appliedtm.com
Coastal, Environmental, Marine, and Water Resource Engineering

CIVIL:
Cairone & Kaupp, Inc.
Landscape Architecture
Civil Engineering
1118 East Columbia Avenue
Philadelphia, PA 19125 4206
Phone: 215 291 2800
Fax: 215 291 2804
www.caironekaupp.com

Drawing Title:

EROSION & SEDIMENT CONTROL PLAN DETAILS

Project No.:	1220	Drawing No.:	C510
Drawn By:	RMB		
Approved By:	JAM		
Scale:			
Date:	28MAR14	Sheet 15 of 15	

P:\2012\1220-usvi marina\Cad\Current\1220C-C510.dwg | Jun 23, 2014 - 1:37pm | JMina | Cairone & Kaupp, Inc.